MONTEREY BOATS

250CR

270CR

290CR

Owner's Manual

Dear Valued Customer,

Welcome to the Monterey Life!

We would like to extend to you our “Thank You” for choosing a Monterey boat!

You have made an investment in our product and we are confident you will enjoy many years of boating pleasure. Your new boat has been built to the standards set forth by the United States Coast Guard, National Marine Manufacturers Association and the American Boat and Yacht Council. We are proud to have you in our “Family!”

At this time, we need you to read your owner’s manual and become familiar with all systems on your boat. Make certain that you and your dealer have filled out and mailed your warranty registration card back to us here at the factory. It is very important to us and it is also a U.S. Federal Regulation.

This manual is an important aid in the operation and maintenance of your boat. The information is intended as a guide and cannot cover every question you may have about your boat and boating in general. We encourage you to contact your dealership for any additional information you might need. If there is a question about your boat that can’t be answered by your dealer, please contact our factory direct by calling the Monterey Boats Customer Service Department, (352) 529-9181 or online if you prefer at: www.info@montereyboats.com.

If you are new to boating, we recommend you participate in a boating class or group to gain more knowledge and confidence. Contact your dealer, local U.S. Coast Guard or U.S. Power Squadron Organizations for information in your area.

With proper care, routine service and preventive maintenance, your Monterey boat will not only reward you with enjoyment, but with reliability, dependability and one of the higher resale values in today’s boating industry.

Enjoy your new boat and please respect our environment at all times. Always remember to practice safe boating procedures for your protection as well as those around you.

Sincerely,

The M.O.S.T. (Monterey Owners Support Team)

Have a safe boating day!

DATE PURCHASED _____

DEALER/PHONE NUMBER _____

BOAT MODEL _____

HULL ID NUMBER _____

TRAILER ID NUMBER _____

ENGINE MAKE/MODEL _____

ENGINE #1 SERIAL NUMBER _____

ENGINE #2 SERIAL NUMBER _____

DRIVE MAKE/MODEL _____

DRIVE #1 SERIAL NUMBER _____

DRIVE #2 SERIAL NUMBER _____

To comply with Federal regulations it is important to return the warranty registration card within 15 days.

TABLE OF CONTENTS

		Page
M	**INTRODUCTION**	M-1
	New Boat Delivery	M-2
	Parts	M-2
	Specifications	M-3
	Special Care & Cleaning	M-3
	Battery Specifications	M-10
	Fire Extinguishing System	M-11
	Special Gas Precautions	M-12
	Generator Set	M-13
	Air Conditioner	M-15
	Boat Layouts & Details	M-16
1	**BOATING SAFETY**	1-1
	Boating Regulations	1-2
	Boater Responsibilities	1-2
	Required Safety Equipment	1-3
	Emergencies	1-7
	Hazardous Conditions	1-8
	Operation By Minors	1-10
	Passenger Safety	1-11
	Water Sports	1-11
	General Precautions	1-12
2	**BASIC RULES OF THE ROAD**	2-1
	Aids to Navigation	2-1
	Right-of-Way	2-4
3	**CONTROLS AND INDICATORS**	3-1
	Shift/Throttle Control	3-1
	Instruments	3-2
	Switches	3-4
	Steering System	3-8
4	**OPERATION**	4-1
	Fueling	4-1
	Starting	4-2
	Shifting/Running	4-4
	Warning Alarm	4-4
	Steering Controls	4-5
	Stopping	4-5
	Docking	4-6
	Boat Trim	4-7
	Drive Trim Angle	4-7
5	**GETTING UNDERWAY**	5-1
	Safety Checklist	5-1
	Safety Equipment	5-2
	Boarding	5-2
6	**RUNNING**	6-1
	Maneuvering Techniques	6-1
	Salt Water	6-2
	Freezing Temperatures	6-3
	Towing Procedure	6-3
	Anchoring	6-4
	Performance Boating	6-5
	Propellers	6-6
7	**CARE AND MAINTENANCE**	7-1
	Electrical	7-1
	Fuel System	7-3
	Steering System	7-3
	Corrosion Protection	7-3
	General Maintenance	7-4
8	**TROUBLESHOOTING**	8-1
	Trouble Check Chart	8-1
9	**STORAGE**	9-1
10	**TRAILERING**	10-1
	Classifications	10-1
	Trailer Components	10-2
	Safety Chains	10-2
	Trailering Checklist	10-3
	Backing Up Trailers	10-4
	Launching	10-5
	Loading	10-5
	Slinging/Lifting	10-6
11	**SHIP SYSTEMS**	11-1
	Electrical Systems	11-1
	Water Systems	11-8
	Hot Water Heater	11-11
	Sanitizing The Fresh Water System	11-12
	Sample Float Plan	11-17
12	**GLOSSARY OF TERMS**	12-1
	WARRANTY	

This page intentionally left blank

INTRODUCTION

Monterey Boats has long been known as a quality boat manufacturer with a commitment to customer satisfaction. This manual is but one example to that commitment. We have carefully prepared this information to assist you in the proper operation and care of your new boat, and some of the responsibilities that go along with owning/operating a boat.

This section contains supplemental information about your Monterey boat that is different or not covered elsewhere in this manual. If you have questions about your boat not covered in this manual, or in the other supplied information, your dealer will be glad to assist you. Refer to the Table of Contents on page i-1 to locate general information.

As part of your warranty responsibilities, you must perform periodic maintenance/ inspections as outlined in this manual, the engine owner's manual and other information supplied in the owner's important papers packet. Please keep this manual on board for future reference and if you ever decide to sell the craft, pass it along to the new owner.

All information, illustrations, and specifications contained in this manual are based on the latest product information available at the time of publication. Monterey Boats reserves the right to make changes at any time, without notice and without incurring obligation, in colors, materials, equipment, specifications and models.

Once again, thank you for choosing a Monterey boat; we wish you many years of boating enjoyment!

IDENTIFICATION NUMBERS

Safeguard information about your boat by recording the Hull Identification Number (HIN), and model and serial numbers of major components and accessories. Keep a detailed Data Sheet for emergency purposes in a safe place off the boat. In case of theft, damage, etc., report these numbers to local authorities, your insurance agent and your dealer.

NOTICE

By law, the HIN must be clearly visible and may not be removed, altered, or tampered with in any way. The HIN is molded to the transom on the upper starboard side, below the rubrail.

BOATING TERMINOLOGY

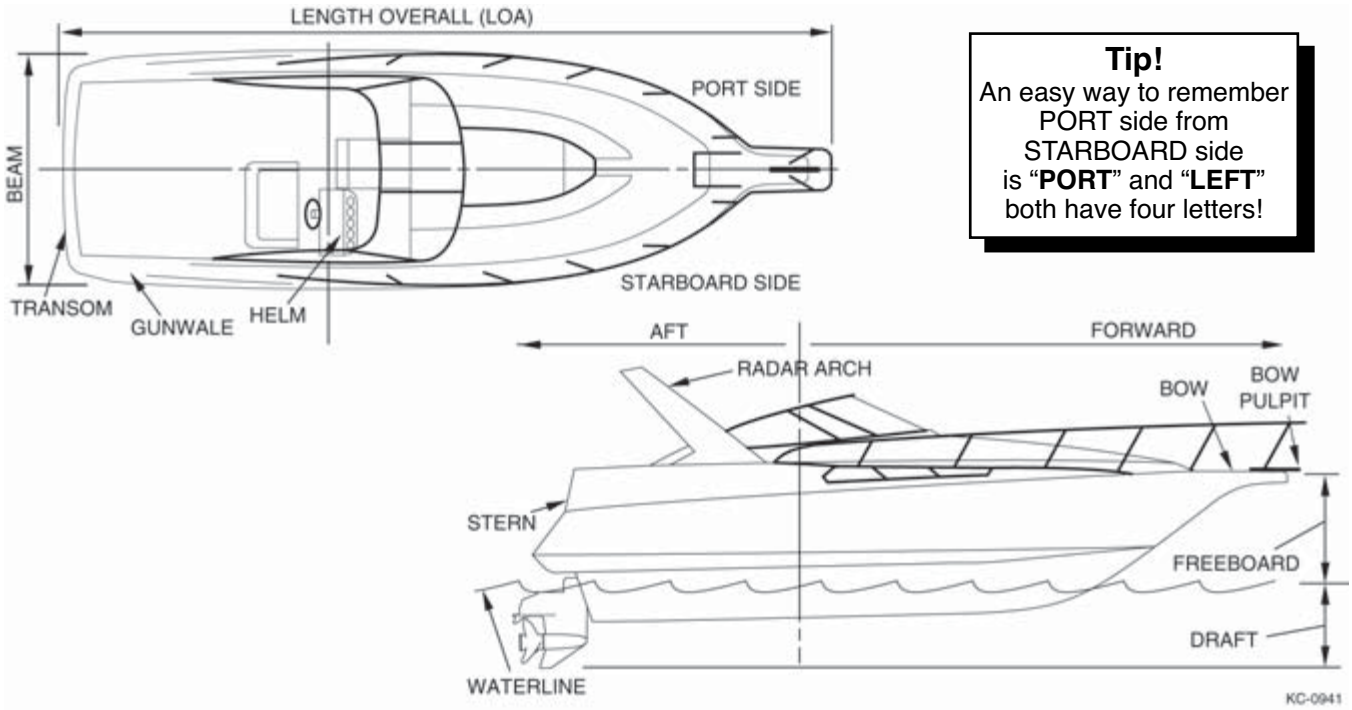

Tip!
An easy way to remember PORT side from STARBOARD side is "**PORT**" and "**LEFT**" both have four letters!

NEW BOAT DELIVERY

Your Monterey boat is inspected at each step of the manufacturing process. Before leaving the factory, every Monterey boat undergoes a thorough check for systems operation, fit and finish. Your Monterey Dealer also performs a Pre-Delivery inspection prior to final delivery. When the new boat is delivered to you, the customer, a final check is performed during orientation. Both the Pre-Delivery and Final Delivery inspections are documented (New Boat Checklist) to ensure trouble-free operation and returned to Monterey Boats.

At the time of new boat delivery, your Monterey Dealer will ask you to sign the completed Warranty Registration and New Boat Checklist for the boat and other accessory equipment. By signing these documents, you acknowledge that you have reviewed and understand all information.

PARTS

Should you require new parts or would like to order an option after your original purchase, please contact your Monterey Boats Dealer to place your orders. Orders may not be placed with the manufacturer.

WARRANTY REGISTRATION AND NEW BOAT CHECKLIST

SUPER SPORT & CRUISER

MONTEREY

1579 S.W. 18th Street
Williston, FL 32696
Tel 352-529-9181
Fax 888-922-6287
www.montereyboats.com

Boat Number (HIN): **RGF**_____ Boat Model:_____

Selling Dealer:_____ Dealer Code:_____

Engine Brand:_____ Engine Model:_____

Engine Serial #1:_____ Drive Serial #1:_____

Engine Serial #2:_____ Drive Serial #2:_____

Date of Sale:_____ Warranty Start Date:_____

Owner Name (Last, First):_____

Address:_____

City:_____ State:_____ Zip:_____

E-Mail Address:_____ (We respect your privacy and w[illegible]e for internal puposes [illegible]

Phone:_____ 2nd Phone:_____

PLEASE, INSPECT AND CHECK OFF THE FOL[illegible]G OP[illegible]TIONS

Indicate Status with the following Key: √ or 1 – OK, 2 – Needs [illegible]ectio[illegible] Comp[illegible] – Not Applicable

BOAT

_____ Boat gel coat, striping & graphics
_____ Upholstery fit, clean and free of defects
_____ Sundeck/Sun Island/lounger operation
_____ Canvas fit, clean and free of defects
_____ Cabin Doors, port lights, hatches, cabinet & head doors, latches
_____ All thru-hull fittings, ball valves, head drain, galley drain, anchor well drain, drain plug-hull, wet bar drain are secure, n[illegible]eaks
_____ Windshield fit
_____ Ladders

EQUIPMENT

_____ Running Lights (Navigation)
_____ Cabin lights, cockpit lights
_____ Toilet (Head) operation & hoses
_____ Stereo – Radio, CD, remote control
_____ Bilge Pumps – Auto float switch
_____ Air Conditioner/Heater – operation & co[illegible]ents se[illegible]
_____ Water pressure system (let pressure stan[illegible]min[illegible] pump goes on) & heater
_____ Stove, coffee maker, o[illegible]rator, ice [illegible]
_____ Generator – Operatio[illegible]ents secure
_____ Bilge Blower(s)
_____ Wipers
_____ Shore power (AC)
_____ Tables
_____ Plumbing Hose Clamp[illegible]
_____ Battery – Polarity, Voltage, Tight Con[illegible]ons
_____ Battery Switch(es) - Operatio[illegible]

ENGINE – BEFOR[illegible]TARTING

_____ Engine mounts – tight
_____ Fuel system operation - no leaks
_____ Engine compartment components not missing, disconnected, loose, kinked, pinched or could chafe
_____ Hose clamps on engine & exhaust
_____ Steering system operation, components secure, steering wheel straight
_____ Drains cooling system closed (Closed cooling coolant level)
_____ Throttle control, operation & adjustment
_____ Shifter control, operation & adjustment
_____ Stern drive oil level at full mark
_____ Crankcase & power steering oil levels at full mark
_____ Stern drive trim operation
_____ Prop Size: _____
_____ Prop installed correctly with grease, nut(s), cotter pins
_____ Prop rotation – Forward & Reverse
_____ Neutral start switch, engine will not start in gear
_____ Transom plate seal has no leaks – water, oil

COMMENTS

_____

_____

[illegible]INE - AFT[illegible] STARTING: (in water)

_____ Oil [illegible]ure
_____ [illegible]e connectors – no leaks
_____ [illegible]ne has no water or oil leaks
_____ [illegible]eed per engine specs, in gear
_____ Ig[illegible]iming check with timing light or scan tool
_____ Gea[illegible] works properly - forward, neutral, reverse
_____ Instru[illegible]ents read correctly
_____ [illegible]xhaust system - no leaks

SEA TRIAL

_____ Boat performance
_____ Port engine operation
_____ Starboard engine operation
_____ Steering –operation
_____ Stern drive trim operation
_____ Instruments register normal
_____ Maximum R.P.M. _____

Technical Check Performed by

_____
Technician Date

PRE-DELIVERY FINAL CHECK

_____ All accessory equipment operates (Mech. & Elect.)
_____ Carpets, curtains, cushions & canvas installed
_____ All boat, engine and accessory literature
_____ Boat properly cleaned, interior and exterior
_____ Trailer wiring, wheels, fenders & brakes

OWNER ORIENTATION

_____ Review & familiarize Owner with operation of all features and options on boat
_____ Sea Trial with Owner
_____ Review of Owners Manual
_____ Review of Warranties
_____ Review of Owner Responsibilities
_____ Review of Service & Maintenance Procedures
_____ Review of Care & Cleaning

Owner Orientation Performed by

_____
Dealer Personnel Date

I have read and agree with the checklist. I have read and understand the Monterey Boats Lifetime Limited Warranty as it appears on the back of this form.

_____
Owner Signature Date

Distribution: Factory CS – Green, Dealer – Yellow, Owner – Manila Card

Rev 1204

SAMPLE

SPECIFICATIONS

MODEL	250 CR	270 CR	290 CR
LOA W/ SWIM PLATFORM	27”-0” (8.2 m)	29’-6” (8.9 m)	31’-10” (9.7 m)
LOA	24’-6” (7.5 m)	26’-11” (8.2 m)	29’-7” (9.0 m)
BEAM	8’-6” (2.6 m)	8’-6” (2.6 m)	9’-6” (2.9 m)
DEAD RISE	18°	18°	22°
FUEL	77 gal (291 l)	89 gal (337 l)	142 gal (537 l)
WATER	20 gal (76 l)	21 gal (79 l)	15 gal (57 l)
WASTE	20 gal (76 l)	21 gal (79 l)	18 gal (68 l)
DRAFT DRIVE UP	24” (60 cm)	22” (55.8 cm)	27” (68.5 cm)
DRAFT DRIVE DOWN	37” (94 cm)	35” (88.9 cm)	40” (101.6 cm)
BRIDGE CLEAR. W/OUT ARCH	6’-0” (1.8 m)	7’-0” (2.1 m)	6’-0 (1.8 m)
BRIDGE CLEAR. W/ ARCH	n/a	9’-0” (2.7 m)	8’-0” (2.4 m)
STD WEIGHT	6,100 lbs (2,767 kg)	7,400 lbs (3,357 kg)	8,000 lbs (3,629 kg)

* LOA without pulpit

- Draft Up and Draft Down - Minimum shown, will increase based on loading and placement
- Water and Waste Capacity - may differ according to options
- Dry Weight - Average weight of base boat without options, fuel, water, waste, battery(ies) or gear.

SPECIAL CARE & CLEANING

The marine environment (sun, salt, pollution, and bird droppings) requires special products for proper care and cleaning. Your dealer is best suited for recommendations on marine care and cleaning products that work best in your area.

Canvas

The convertible/bimini top is made of acrylic materials. To gain longer life and top performance from your canvas including windshield connector, side and aft curtains, bow and cockpit covers, we recommend the following:

- The canvas and clear plastic are not designed to withstand long periods of time exposed to the elements as a protective cover at dock side or when your boat is in storage. A full, properly fitted, light-colored, mooring transportation or storage cover should be used for these purposes.
- If canvas gets wet during use, remove side curtains and open windshield so seams can dry out. The air circulation will allow all canvas to dry and prevent the growth of mildew. **Never store wet or damp canvas.**
- Occasionally set up all canvas and curtains and hose down with fresh water to remove accumulated soot and dirt. Sweep or brush the underside of the canvas to prevent the accumulation of dirt and mildew.

⚠ WARNING ⚠

Never trailer your boat with the convertible/bimini canvas (including side curtains, aft curtain, windshield connector, bow cover and cockpit cover) up. Monterey Boats' canvas is not designed to withstand the high wind loads of trailering. Severe wind damage can occur such as torn material, fastener pull-out and frame distortion. Damage caused by trailering is not covered under the limited warranty.

- The outer canvas surfaces can be cleaned with a soft scrub brush and either automotive convertible top cleaners or household cleaners suitable for use on acrylic surfaces. The underside of the canvas may be periodically sprayed with a spray disinfectant to prevent the growth of mildew.
- Do not store or dock your boat under trees. Tree sap is very corrosive to canvas and can also be harmful to gelcoat and vinyl interiors.
- Adjust top bows to eliminate pockets in which rain water can accumulate. The weight of this accumulated water can collapse the top or bag the canvas.
- Zippers and snaps should never be forced. Occasionally lubricate with silicone/Teflon grease.
- When trailering, dismantle, roll or fold and securely stow all canvas to prevent damage. Monterey recommends purchasing a transportation cover to keep your boat clean on the road. Your Monterey Dealer will assist you in finding a suitable cover (not available from Monterey Boats).
- Roll **clear plastic (isinglass)** curtains (do not fold) and store in a clean, dry place.
- Do not allow petroleum products or bug sprays to come in contact with canvas.

NOTICE

Your Monterey boat is basically an open vehicle. Therefore, in spite of well-designed and well-fitting canvas enclosures, your boat is not waterproof. We have made every effort to design these enclosures to conform with the boat, but a certain amount of leakage may occur, especially at the seam lines. After cleaning with soap and water, allow seams to thoroughly dry. A sealant can be applied on the seams to somewhat close the needle holes according to the manufacturer's instructions.

Acrylic and Plexiglass

Acrylics and plexiglass have properties that make them ideal for the marine environment. Components such as cabin doors and deck hatches need special care to prevent scratches and other damage. The following guidelines will help keep acrylics and plexiglass looking good for years to come.

DO'S

- Wash your hatches, windshield connector, side curtains and other clear plastic pieces, as well as other acrylic components on your boat with a mild soap and plenty of lukewarm water.
- Use a clean, soft cloth, applying only light pressure.
- Rinse with clear water and dry by blotting with a damp cloth or chamois.
- Grease, oil or tar may be removed with a good grade of hexane, aliphatic naphtha or kerosene. These solvents may be obtained at a paint or hardware store and should be used in accordance with the manufacturer's recommendations.
- To maintain a high-luster finish on your acrylics, we recommend that after properly cleaning, apply Meguiar's™ Mirror Glaze #10 with a soft towel. Note: If slight scratches appear on acrylics, use Meguiar's™ Mirror Glaze #17.

NOTICE

Clear plastic (isinglass) is subject to ultraviolet (sunlight) degradation over time. It may turn yellow-brown (a burnt appearance) and get brittle. Two things that can accelerate this degradation are:

1. **Direct contact with aluminum or stainless steel frames. Use "Standoffs."**
2. **In salt water areas, dried salt crystals on the plastic will amplify sunlight. Wash after each use and/or windy day.**

DON'TS

- Do not subject acrylic material to high temperatures when polishing.
- Do not use glass cleaning sprays, scouring compounds, or solvents like acetone, gasoline, benzene, carbon tetrachloride or lacquer thinner.
- Do not use masking tapes, duct tapes or packing tapes on your acrylic materials.
- Do not drill holes in your acrylic materials without proper drill bits (special bits are used in acrylic material to avoid damage).

Stainless Steel

Marine grade stainless steel components such as hardware, cleats, eyes and rails offer superior corrosion resistance. When properly maintained, stainless steel will not rust or stain, even in harsh saltwater environments. However, if not maintained, stainless steel can rust, discolor or even corrode. The following guidelines will help keep stainless steel looking good for years to come.

DO'S

- Clean stainless steel frequently (daily in salt or polluted environments) with mild soap and plenty of water. Any cleaner safe for use on glass is usually safe for stainless.
- Remove rust spots (especially around welds) immediately with a brass, silver or chrome cleaner. Irreversible pitting will develop under rust allowed to remain on stainless for any period of time.
- Remove rust stains on gelcoat. See dealer for recommended product.
- Protect stainless with waxes or polishes suitable for marine use.

DON'TS

- Do not use coarse abrasives like sandpaper or steel wool which may actually cause rusting
- Do not use acids or bleaches which may etch the naturally occurring protective coating.
- Do not leave stainless steel in contact with iron, steel, or other metals which cause contamination leading to rust or corrosion.

Gemlux Stainless Steel Information and Care Instructions

The GEMLUX Stainless Steel products on your boat are made to the highest quality standards. Stringent quality control processes such as metallurgical analysis, precision polishing, multiple inspections and Six Sigma procedures ensure the highest quality possible. In order to ensure that your GEMLUX Stainless Steel maintains its beautiful finish, it is critical that you care for it properly.

WARNING: Your Stainless Steel can be damaged by exposure to acids and other corrosive agents found in many cleaning products. A partial list of additives that may cause staining and a weakening of the finish is provided below. Use of these and other similar solutions to clean your boat can cause your Stainless Steel to bleed and will void your warranty.

Chlorsulphonic Acid	Comet	Sodium Hypochlorite	Hydrofluoric Acid
Ferrous Iodide	EZ-ON, EZ-OFF Cleaner	Sulphuric Acid	Sodium Bifluoride
Hydrobromic Acid	Ferric Chloride	Muriatic Acid	Stannic Chloride
Iodine	Fluorine	On & Off Cleaner	SnoBol
Sodium Chlorite	Hydrofluosilicic Acid	Rust StainsAway	Soft Scrub
Sulphur Chloride	Silver Chloride	Ferrous Chloride	Marine Spray Nine
Bleach		Hydrochloric Acid	

Cleaning and Cleansers

Frequent cleaning of your stainless steel with soap, water and GEMLUX Cleaning Wax will help maintain the finish. Always rinse the metal thoroughly with clean water and dry completely. Clean soft cloths or pads should be used. The use of steel wool pads or other highly abrasive brushes or sponges are not recommended and will damage the surface.

Contamination of the surface by chemicals, dirt or other material hinders the passivation process and traps corrosive agents, thus reducing corrosion protection. If your stainless is exposed to such chemicals it should be re-passivated with GEMLUX Passivation solution.

Job	Cleaning Agents	Method	Comments
Routine cleaning	Soap and water	Apply with a sponge or soft cloth. Dry area completely.	Once your stainless is free of discoloration and/or bleeding, spray GEMLUX Passivation Solution directly onto stainless. Allow to cure for 30-60 seconds. Rinse with fresh water and dry the area. This solution will help re-passivate the stainless steel.
Stubborn stains, discoloration or bleeding	GEMLUX Cleaning Wax	Apply with soft, dry cloth. Allow to dry. Polish and buff using a clean, dry cloth.	

For purchase information on the GEMLUX Cleaning Wax or GEMLUX Passivation Solution, please contact us at the numbers listed below.

Tel: 904-264-0173 / 888-GEMLUX-1 (888-436-5891)

Fax: 904-269-5905

www.gemlux.com

Cockpit Vinyl Upholstery with PreFixx® Coating

Beginning with the 2008 model year, Monterey Boats uses OMNOVA white, smoother and embossed pleated vinyl material with **PreFixx** top coating. All other accent embossed white and colored vinyl requires different care and maintenance. Please refer to page 7-4 for more information.

PreFixx Cleaning Instructions

PreFixx is engineered so that upholstery can be cleaned again and again without showing signs of wear. With easy cleanability, proven stain and abrasion resistance, **PreFixx** protective finish can reduce maintenance costs and frequent reupholstery.

Durability. Creates a barrier that resists stains from penetrating to the surface of the vinyl for proven, long-lasting protection. With laboratory-tested stain resistance and improved wear properties, BoltaSoft® upholstery treated with **PreFixx** protective finish can retain a “like-new” appearance longer.

Easy Maintenance. Enables most common stains like dirt and smudges to wipe off easily. Many difficult stains like ballpoint ink also can be cleaned with active solvents, such as nail polish remover, without damaging the **PreFixx** protective finish (when recommended cleaning instructions are followed).

Normal Care and Cleaning

Remove ordinary dirt and smudges with a mild soap and water solution and a clean, soft cloth or towel. Dry with a soft, lint-free cloth or towel. CAUTION: The use of vinyl “conditioners” or “protectants” is not recommended and should be avoided on vinyl upholstery treated with **PreFixx** protective finish.

Special Cleaning Problems

Although BoltaSoft upholstery treated with **PreFixx** protective finish is resistant to most common stains, the dyes and pigments in some staining agents have the ability to create a permanent stain if not treated properly. To clean difficult stains from upholstery treated with **PreFixx** protective finish, locate the staining agent in the lists below and follow its recommended cleaning method. For best results, treat all stains immediately.

Cleaning Tip: To determine the method and type of cleaners, the source of the stain should be identified.

Staining Agents: Baby oil, ketchup, chocolate, motor oil, olive oil, grape juice, urine, blood, hair oil tonic, tea, coffee and betadine. Use Method 1.

Staining Agents: Eye shadow, crayon and grease. Use Method 1. If stains remain, use Method 2.

Staining Agents: Tobacco tar (nicotine), permanent felt tip marker, yellow mustard, lipstick, ballpoint pen and spray paint. Use Method 1. If stains remain, use Method 2. For stubborn stains still remaining, use Method 3.

The recommended cleaners used in Cleaning Methods 1, 2 and 3 are progressively more aggressive. Often, it is better to begin with the least aggressive cleaner and move to the next strongest only if the stain remains. NEVER EXCEED a staining agent’s recommended cleaner or cleaning method, however.

Method 1: Use one of the following cleaners with a soft cloth or damp sponge. Rinse area with fresh water, and then dry with a clean, lint-free cloth.

- Formula 409® All-Purpose Spray Cleaner
- Fantastik® Spray Cleaner

Method 2: Use a solvent-type cleaner*, such as rubbing alcohol (isopropyl alcohol). Rinse cleaned area with fresh water, and then dry with a clean, lint-free cloth.

Method 3: Use a strong, active solvent cleaner* diluted in water (70% water/30% solvent cleaner), such as nail polish remover (acetone/water). Clean with a soft cloth or damp sponge. Stain should be removed with less than six (6) rubs. If the stain persists after six rubs, the stain has set and probably cannot be removed. Rinse cleaned area with fresh water, and then dry with a clean, lint-free cloth.

⚠ CAUTION

Some solvents are highly flammable. Exercise proper care in cleaning and notify personnel in area of danger. Wear rubber gloves during all cleaning activities. Use caution in cleaning around buttons, stitching and wooden or decorative trim, since these solvents could seriously damage such areas.

PREFIXX is a registered trademark of OMNOVA Solutions, Inc.
FORMULA 409 is a registered trademark of The Clorox Company.
FANTASTIK is a registered trademark of Dow Consumer Products, Inc.

Gelcoat

The smooth, beautiful skin of the fiberglass hull is made of gelcoat. Gelcoat is a strong but thin (though thicker than automotive paint) layer of colored resin. The best way to keep the gelcoat skin on your boat in top condition is through regular maintenance. The following guidelines will help keep gelcoat looking good for years to come.

DO's

- Keep the gelcoat surface out of direct sunlight or covered when not in use.
- Wash gelcoat frequently (daily in salt or polluted environments) with mild detergent and plenty of fresh water. Remove any stains quickly. Gelcoat is microscopically porous, so long term staining may become permanent.
- Regularly (monthly in salt or polluted environments) wax gelcoat surfaces with marine grade wax recommended for fiberglass finishes.

DON'Ts

- Do not use plastic or other nonporous (non-breathable) materials to cover gel coat surfaces. Trapped moisture from condensation can cause gel coat damage. Shrink wrap storage covers must be properly ventilated, including hullsides.
- Do not use abrasives, bleaches, ammonias, acids or harsh detergents. See your dealer for special marine formulations.
- NEVER wax a gel coat surface in direct sunlight.
- Do not attempt to remove stains and scratches. Chalking, stains, and minor scratches can be removed in most cases with careful rubbing and polishing with appropriate chemicals and is best done by a professional – see your dealer.

⚠ CAUTION

Apply No-Slip tape or step plates on surfaces which are walked on. Waxed gel coat surfaces are extremely slippery, especially when wet.

Exterior Carpet

Exterior carpet manufactured by Syntec Industries is produced with a special blend of resilient fibers to withstand traffic and retain its beauty.

Carpets manufactured by Syntec are inherently stain-resistant. To keep your carpet at its best, we recommend regular vacuuming for general cleaning, soap and water for hard-to-remove spots and an approved cleaner for deep cleansing and to revitalize the carpet.

Stain Removal

If a spill does occur, it can easily be removed by following the stain removal chart. All stains should be removed as soon as possible, as this enhances the ability to remove the stain.

Miscellaneous Stains	Removal Process
Coffee, Tea, Coke, Dye, Fruit Juice, Ice Cream, Motor Oil, Clay, Grease, Blood, Catsup, Chocolate, Milk, Rust, Latex Paint, Water Colors, Berry Stains, Egg, Salad Dressing, Wine, Furniture Polish, Fish Formula, Mayonnaise or Urine	Apply warm water and household detergent in minimal amounts to the stained area. Sponge or scrape until stain is removed and wash thoroughly with clean water.
Persistent Stains	**Removal Process**
Chewing Gum, Crayon, Ink, Wax, Lipstick, Tar, Polish or Oil Paint	Apply warm water and household detergent. Work well into the stained area, then flush with warm water.

NOTICE

Most stains should be removed easily from olefin fibers. If the stain persists, the cleaning procedure should be repeated to ensure stain removal. Remember, the sooner the stain removal process begins, the easier the stain will be to remove. Under no circumstances should any solvents normally associated with the dry cleaning of apparel (perchlorethylene, carbon tetrachloride, etc.) be utilized, as permanent damage to the fiber will result.

MARPOL Treaty

The International Convention for the Prevention of Pollution from ships, commonly referred to as the MARPOL Treaty (MARine POLlution) prohibits the overboard dumping of all ship-generated plastics, chemicals, garbage and oil.

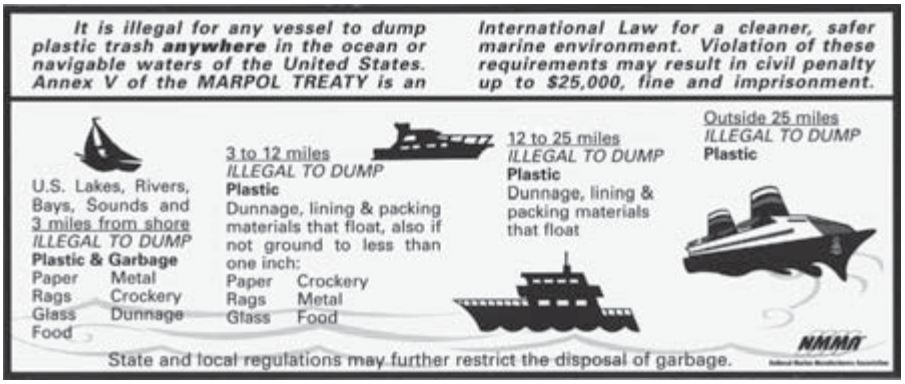

BATTERY SPECIFICATIONS

ATTENTION

MINIMUM BATTERY SIZE REQUIRED:
Group 24
750 CCA @ 0°F/-18°C or 950 MCA

ATTENTION

MINIMUM BATTERY SIZE REQUIRED:
Group 31
800 CCA @ 0°F/-18°C or 1000 MCA

Group 24 is for: V6 & V8 Small Block Engines up to 6.2 Liters.

Group 31 is for: Volvo 8.1L, Merc 496 Mag Big Block Engines and Merc DTS Models

NOTICE

Do not use a battery with wing nut connectors; use hex nuts. Battery cables should always be tightened with a wrench.

CAUTION

Do not use deep cycle batteries on EFI engines. A deep cycle battery, while it may have enough cold cranking amps (CCA), will cause problems with EFI engines. The correct battery for EFI engines is a standard marine starting battery.

Batteries are not provided by Monterey Boats. The above battery information was obtained from installation and owners manuals published by Mercury Marine and Volvo Penta of the Americas. For sourcing and additional battery information, contact your local Monterey dealer.

Typical labels used to identify battery cables and fuel lines are shown below.

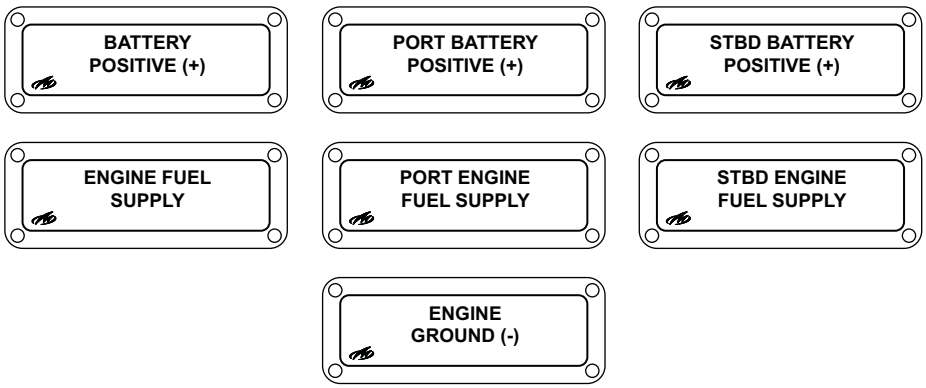

Positive battery cables are red. Negative battery cables are yellow or occasionally black.

FIRE EXTINGUISHING SYSTEM

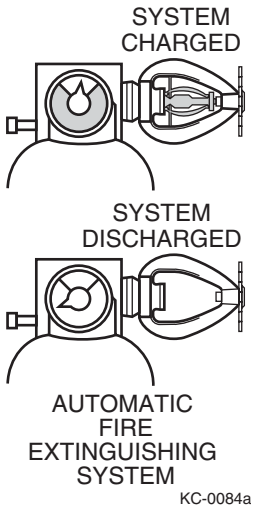

Some stern drive boats are equipped with an optional Automatic Fire Extinguishing System for an engine compartment fire. The system is automatically actuated when temperatures reach or exceed a preset limit.

When actuation occurs, a loud popping sound may be heard followed by “rushing” air sound. **When a discharge occurs, immediately shut down all electrical and mechanical systems including engine and powered ventilation (Blowers).**

Do not open the engine hatch at this time! This feeds oxygen to the fire and flashback can occur. Allow the extinguishing agent to “soak” the compartment for at least fifteen (15) minutes, and wait for hot metals and fuels to cool before inspecting for cause or damage.

WARNING

Fire extinguishing agents and fire by-product fumes are toxic; do not breath fire fumes. Accidental discharge can be dangerous and may cause serious injury. Do not attempt to service the system unless qualified to do so.

WARNING

If fire is still active after system dishcarges: All occupants should immediately put on PFDs (Personal Flotation Devices) and get off the boat.

CAUTION

Extinguishing agent cylinders must be accurately weighed periodically according to the manufacturer’s specifications to ensure that they are adequately charged.

SPECIAL GAS PRECAUTIONS

⚠ DANGER ⚠

Holding tank systems on boats produce odorless Methane gas which is extremely lethal in enclosed spaces. Follow these precautions when working on your boat's holding tank system to prevent injury:

- **Before work, open all doors and hatches wide, and rig a good fan to disperse gas.**
- **During work, have another person frequently check on you.**
- **Before and during work, DO NOT SMOKE.**

⚠ DANGER ⚠

EXTREME HAZARD – Carbon monoxide gas (CO) is colorless, odorless and extremely dangerous. All engines and fuel burning appliances produce CO as exhaust. Direct and prolonged exposure to CO will cause BRAIN DAMAGE or DEATH. Signs of exposure to CO include nausea, dizziness and drowsiness. Sources of CO include:

❶ Blockage of boat exhausts by obstruction.

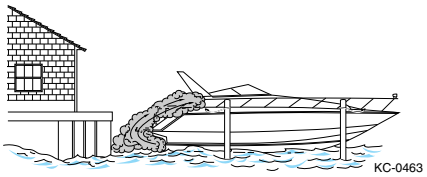

❷ Exhausts traveling along obstruction.

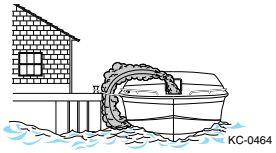

❸ Operating at slow speed or while dead in the water.

❹ Operating with high bow angle.

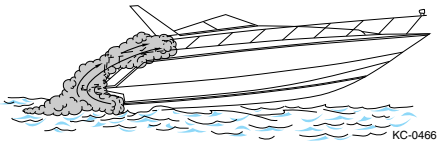

❺ Exhausts from other vessels in confined areas.

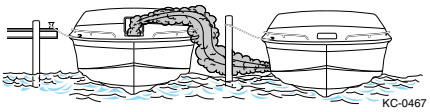

❻ Operating with canvas tops and side curtains in place without ventilation.

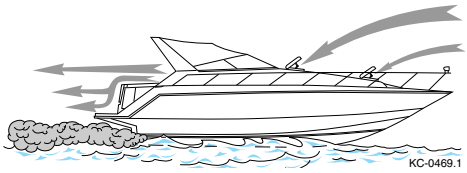

ENSURE ADEQUATE VENTILATION FOR CORRECT AIR MOVEMENT THROUGH BOAT!

GENERATOR SET

The following procedure summarizes the operation of, and safety precautions for, the optional marine generator available for your boat. Before operating your generator, read the owner's manual which accompanies your generator.

Prestart

1. Check that the air cleaner is clean and properly installed.
2. Check the battery connections and electrolyte level (if battery has filler caps).
3. Check that the fuel tanks are full and that the fuel system is primed for operation.

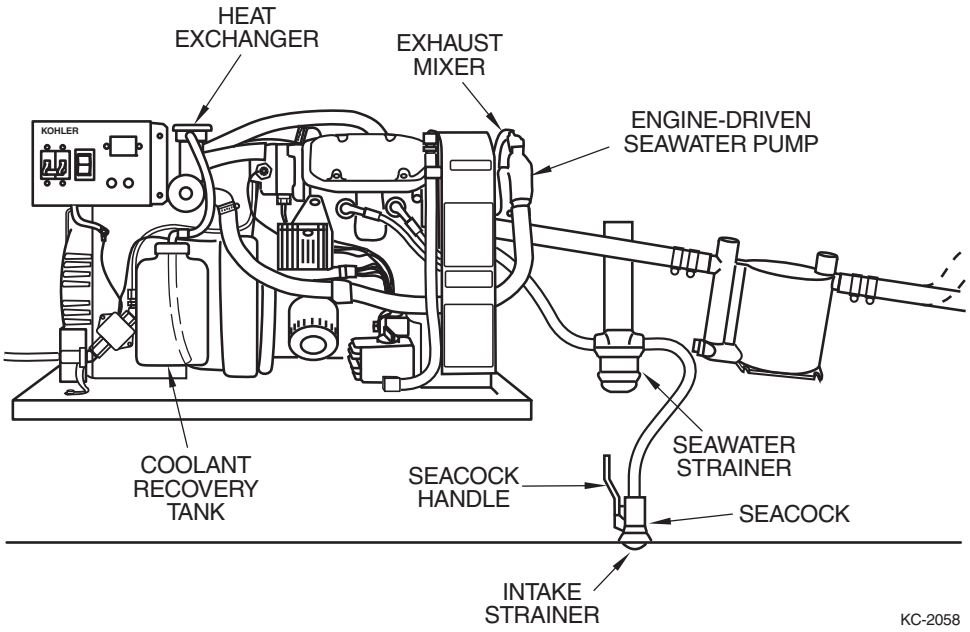

WARNING

Hot coolant can cause severe burns. Do not remove the pressure cap when engine is hot.

4. Check that coolant level in coolant recovery tank is between the MIN and MAX marks. Periodically remove the pressure cap and check on the fluid level **when engine is cool**. Do not rely solely on level in the coolant recovery tank.
5. For initial startup only, prime the sea water pump by closing seacock, removing hose from water filter outlet, filling hose and pump with clean water, replacing hose and opening seacock.

CAUTION

Failure to have seacock open when generator is running, will result in serious engine damage due to overheating.

6. Check that generator seacock is open.
7. Check that marine ship-to-shore transfer switch is in the proper position and that all breakers are in the OFF position.
8. Open the manual fuel shut-off valve (if equipped).

Starting

⚠ WARNING ⚠

The blowers must be operated for a minimum of four minutes before each time the engine is started. Failure to operate the blower can cause an explosion.

1. Operate the ventilation blowers for a minimum of four minutes and check the engine compartment for gasoline vapors.

CAUTION

Do not crank the engine for more that seven seconds at a time. Allow a five second cool down period between cranking attempts if the engine fails to start. If the engine fails to start after three attempts , contact an authorized dealer for repairs. Failure to do so may result in serious damage to the starter motor.

2. Press the controller master switch, or the remote start switch on the AC control panel, to the START position and release switch when the unit has started.

CAUTION

Allow at least 30 seconds after shutdown before starting a hot engine. If the engine fails to start after the first attempt, close the seacock before continuing. This will prevent sea water from entering the engine cylinders through the exhaust valve. Once started, reopen seacock.

CAUTION

After generator has started, check to be sure that water is flowing overboard from the generator discharge. If there is no discharge, stop and check for leaks or obstructions.

Stopping

1. Run generator set at no load for five minutes to allow engine to cool down.
2. Switch the controller master switch, or the remote start switch on the AC control panel, to the STOP position and wait until the generator set comes to a complete stop.

Circuit Protection

The AC circuit breaker on the generator controller will trip if a fault is detected in the AC output circuit. In case of a fault, refer to your generator owner's manual for troubleshooting information.

CAUTION

Only replace fuses with fuses of the same type (ABC or #AB (ceramic)) and ampere rating. Do not use clear glass fuses.

Engine Shutdown Switches

The generator set engine is protected by three shutdown switches which automatically reset after the engine cools down; or in the case of low oil pressure, if the problem is corrected.

Low Oil Pressure (LOP) – will shut down unit if pressure is 20 psi or less.

High Water Temperature (HWT) – will shut down unit if temperature is greater than 248°-266 °F.

High Exhaust Temperature (HET) – will shut down unit if the temperature is greater than 215° ± 5 °F.

AIR CONDITIONER

The following describes the optional air conditioning unit available for your boat. Before operating your air conditioner, read the accompanying owner's manual for more information.

The rated capacities of the air conditioning units are:

- 5,000 BTU/hr for the 250
- 7,000 BTU/hr for the 270
- 10,000 BTU/hr for the 290

The optional air conditioning unit is supplied with sea water through a sea water pump. The seacock must be open to operate the heating/cooling unit.

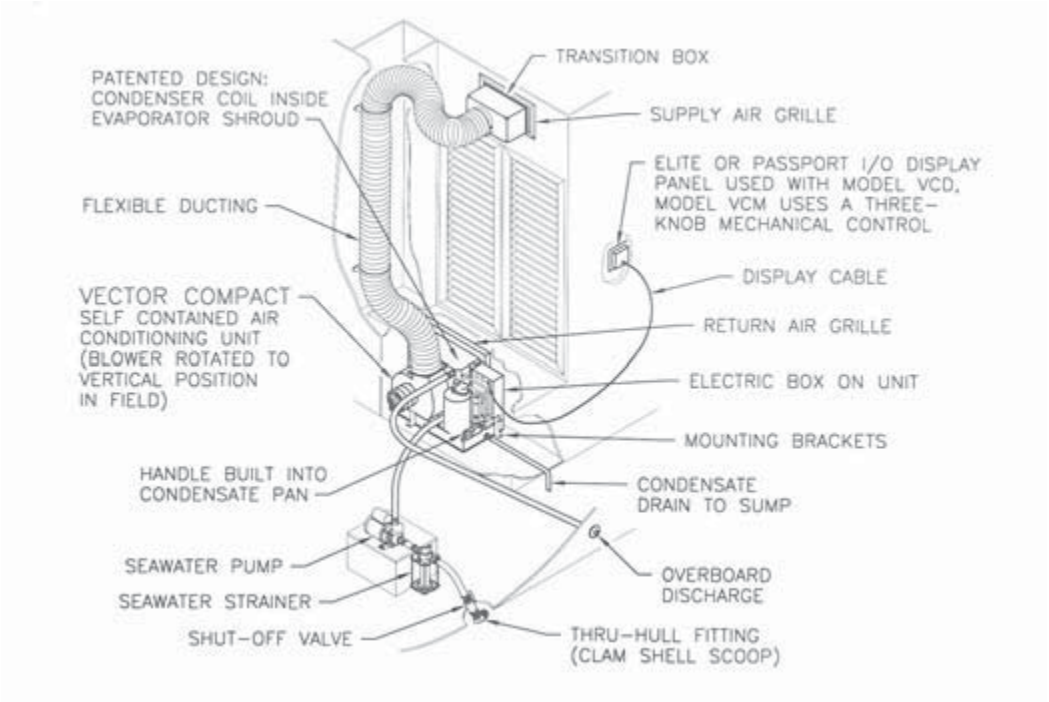

CAUTION

After air conditioner has started, check to be sure that water is flowing overboard from the air conditioner discharge. If there is no discharge, stop and check for leaks or obstructions.

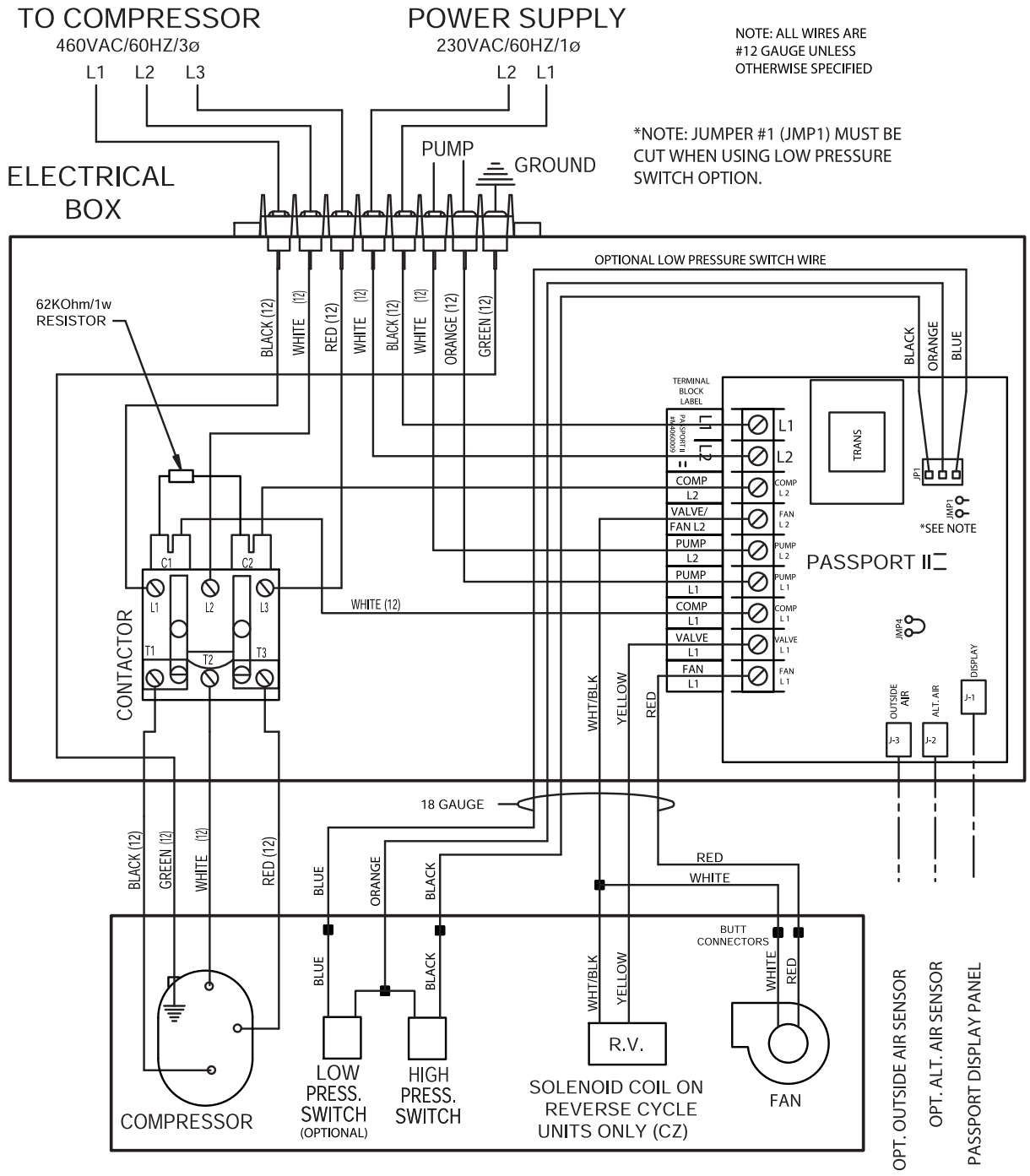

-

VECTOR SERIES AIR CONDITIONER SELF CONTAINED UNIT WIRING DIAGRAM

CAUTION

The sea strainers for the generator and/or air conditioning must be checked regularly for obstructions. If the strainer gets clogged it can prevent adequate water flow to the units causing severe damage. The strainers are equipped with a clear top for easy visual inspection. In order to clean the filter basket, first make sure the seacock is in the CLOSED/ OFF position. Verify the genset and or AC systems are turned off. Remove the knob located on the top of the strainer basket. Gently apply upward pressure on the clear lid. Do not use any tool to force or pry the lid up. This may result in damage to the strainer. Remove the clear lid and rubber seal. Remove the strainer basket assembly, remove all debris, and rinse clean. Reinstall the strainer basket. Apply a small amount of lubricant to the rubber seal. Reinstall the lid and tighten the knob snugly. Do not overtighten! Open the seacock and activate the unit to check for leaks.

When the seacock handle is in the vertical position to the base, it is open and seawater can flow into the system it supplies. When the handle is in the horizontal position, the seacock is closed and no water can flow into the unit. Always keep the seacock closed when not in use. Also verify it is open before starting any equipment it supplies water to. Periodically check seacock seals for leaks and that all hose clamps on fittings are tight. Lubricate moving parts at least annually.

BOAT LAYOUTS & DETAILS

The following illustrations are intended to give you, the boat owner, a brief overview of your new cruiser. These illustrations are a representation and may not reflect all options or layouts. Your Monterey dealer or their representative can give you a detailed demonstration of your boat and operation of its many features.

Warning and Safety Labels

Label placement shown is approximate.

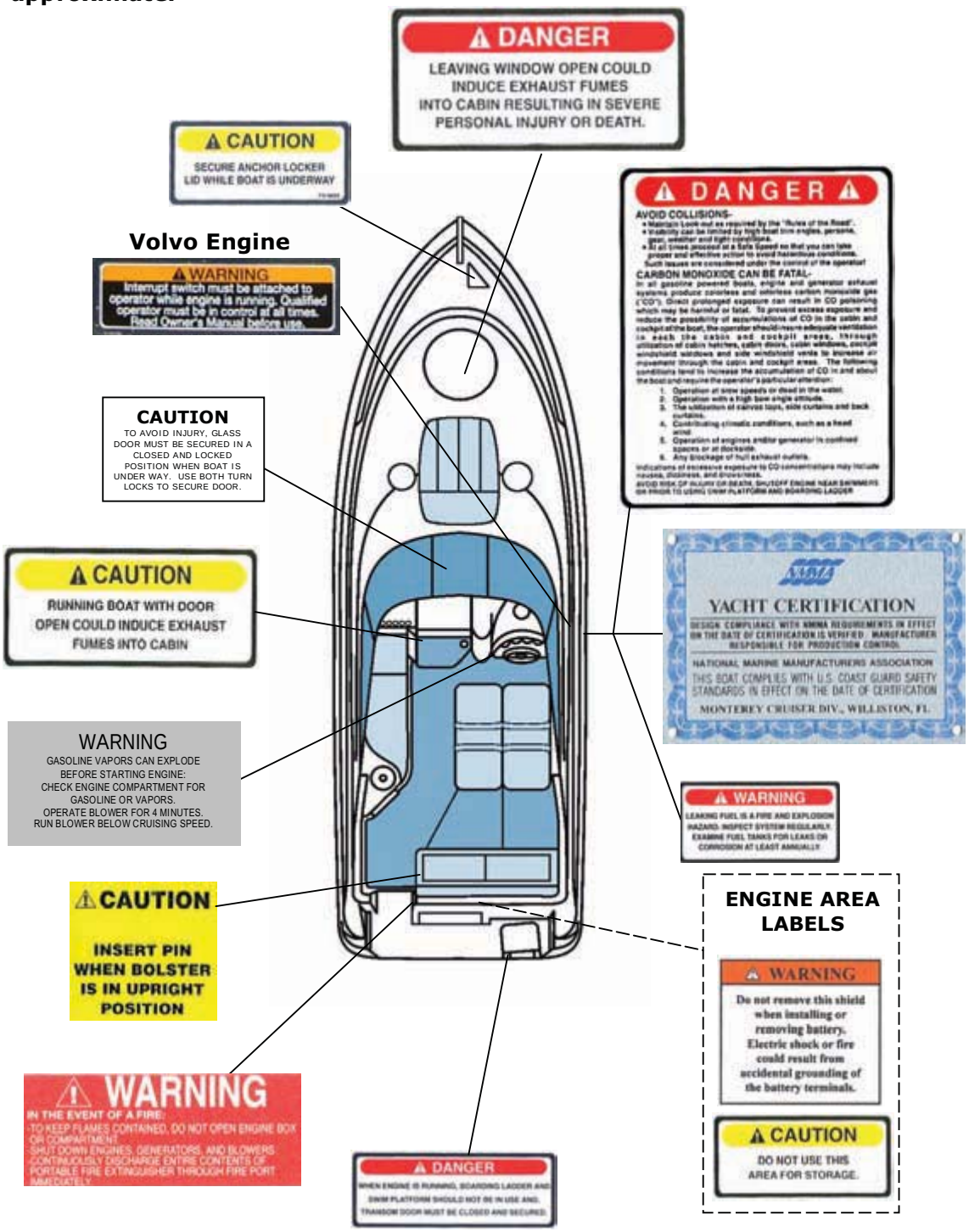

The labels on this page are a sample of the warning and safety labels on your boat. There may be additional or differently worded labels. Please be aware and use appropriate caution.

Cruiser General Features

Mounting Bracket
Ensure pin is fully engaged

Bimini Top Frame

Push Buttons to adjust Canvas Frame. Ensure buttons are engaged before boat is in operation.

Anchor Chain
Tensioner
Unsecured

Anchor Chain
Tensioner
Secure
Secure before boat is in operation

Window Latch
Turn 90° to Lock into Secured Position

Windshield Magnet
Use caution when opening windshield walk-thru. This magnet is very powerful and could cause injury or damage to vessel

250/270 Exterior

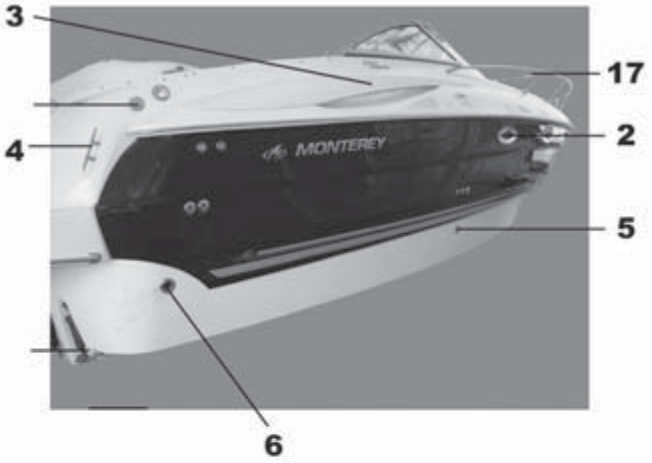

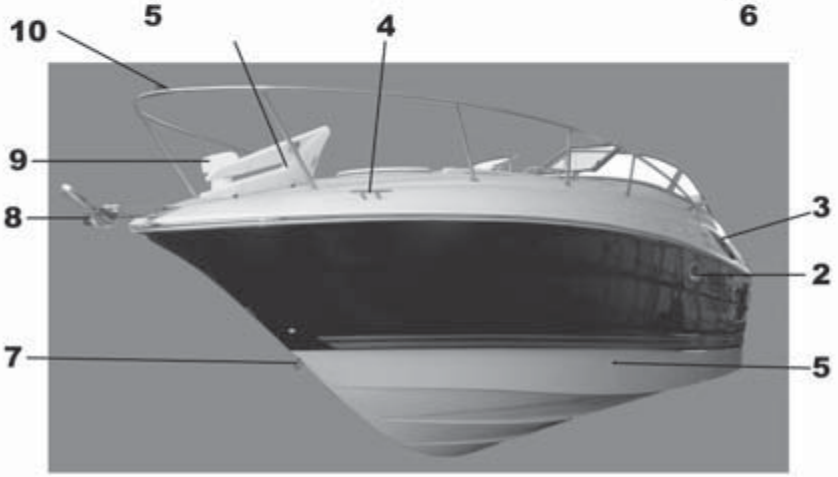

1. SHORE POWER INLET
2. PORTHOLE, OPENING W/SCREEN
3. ENGINE ROOM VENTILATION
4. CLEAT (PULL UP OPTIONAL)
5. THRU HULL DRAIN
6. THRU HULL DRAIN W/SCUPPER
7. BOW EYE
8. ANCHOR ROLLER
9. REMOTE SPOT LIGHT (OPT)
10. FRONT NAV LIGHT
11. DUNNAGE LOCKER
12. TRANSOM DOOR (SECURE IN MOTION)
13. SKI TOW HOOK
14. FOLDING TELESCOPIC SWIM LADDER
15. TRIM TAB
16. SPEEDO PICK UP (VOLVO OSI ONLY)
17. BOW RAIL

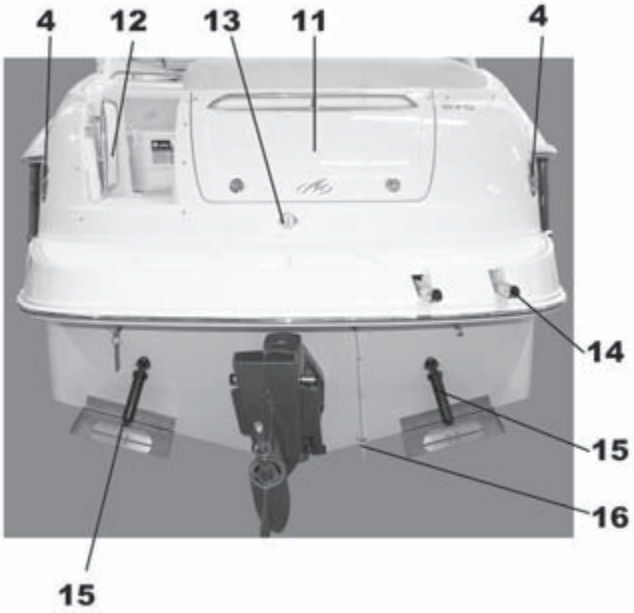

250/270 Engine Room

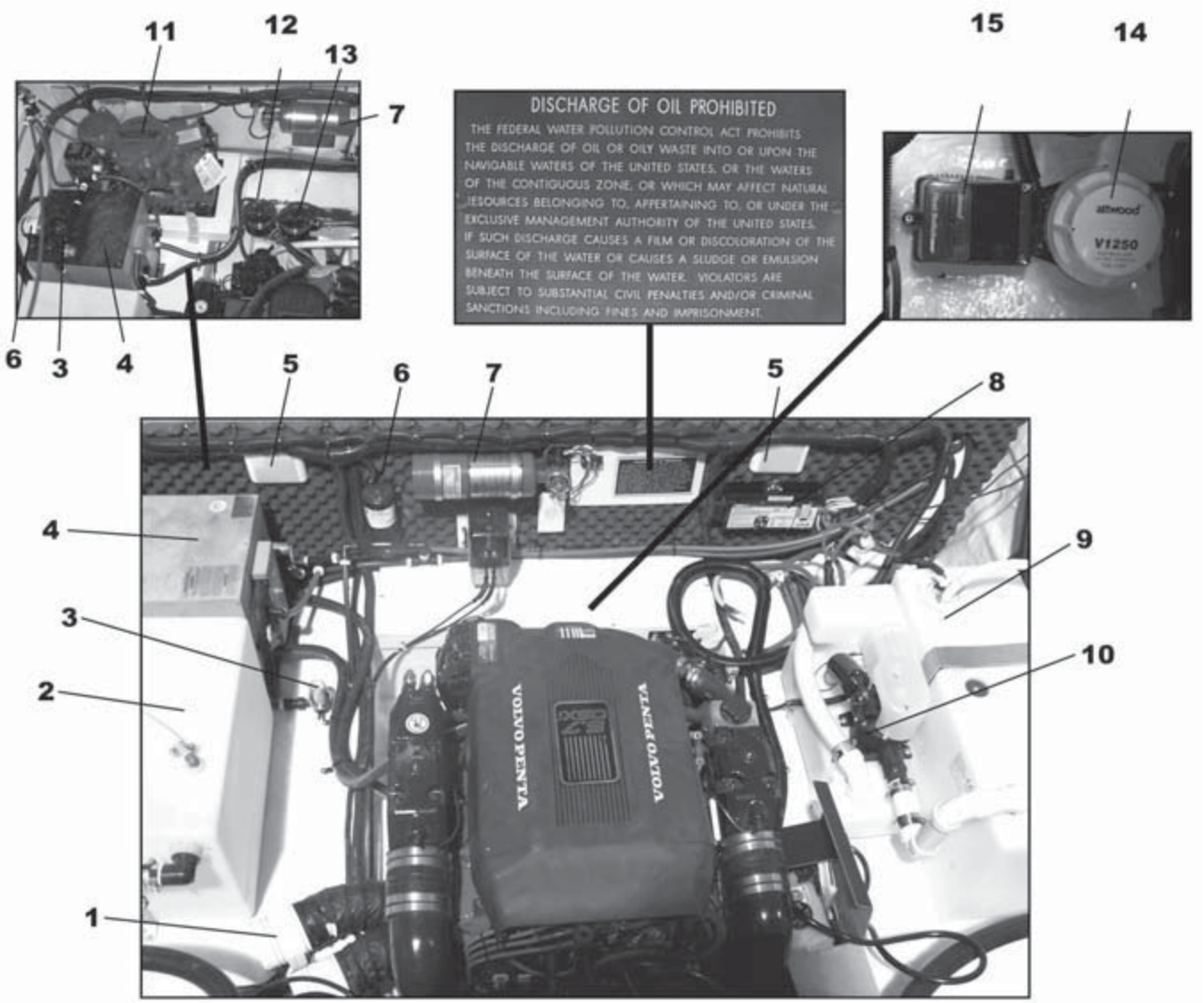

1. ENGINE BLOWERS
2. FRESH WATER TANK
3. FRESH WATER FILTER
4. WATER HEATER
5. ENG. RM. LIGHT
6. FRESH WATER PUMP
7. FIRE EXTINGUISHER
8. BATTERY CHARGER
9. WASTE TANK
10. VACU-FLUSH (OPT)
11. GENERATOR (270 OPT ONLY)
12. GEN. SEA STRAINER (OPT)
13. A/C SEA STRAINER (OPT)
14. BILGE PUMP
15. AUTOMATIC FLOAT SWITCH

250/270 Cockpit

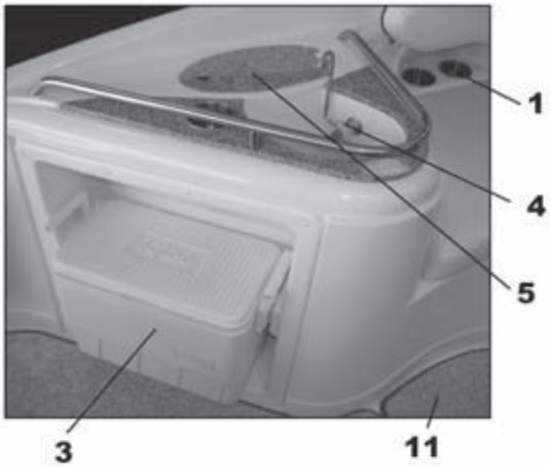

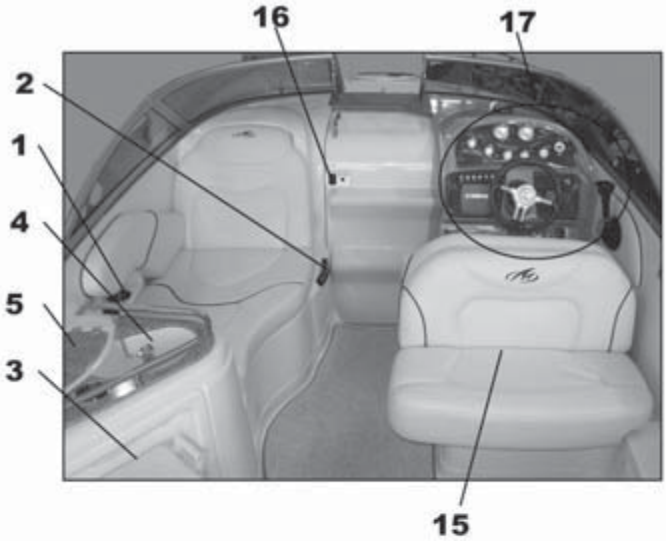

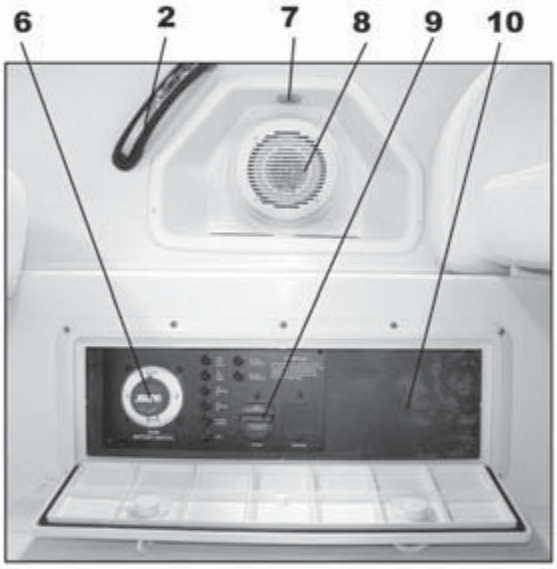

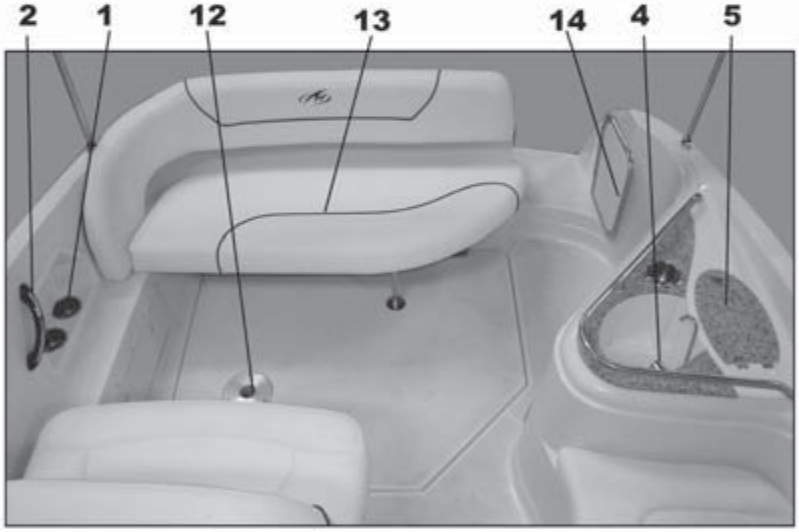

1. CUPHOLDER
2. GRAB HANDLE
3. PORTABLE ICE CHEST
4. WET BAR FAUCET
5. WETBAR COOLER/STORAGE
6. MAIN BATTERY SWITCH
7. COURTESY LIGHT
8. SPEAKER
9. CIRCUIT BREAKER
10. BATTERY SWITCH PANEL
11. COCKPIT CARPET (OPT)
12. COCKPIT TABLE BASE
13. REMOVEABLE REAR SEAT
14. TRANSOM DOOR
15. HELM SEAT (LAYS FLAT)
16. CABIN DOOR W LOCKING LATCH
17. HELM CONSOLE (SEE HELM PAGE)

250/270 Helm

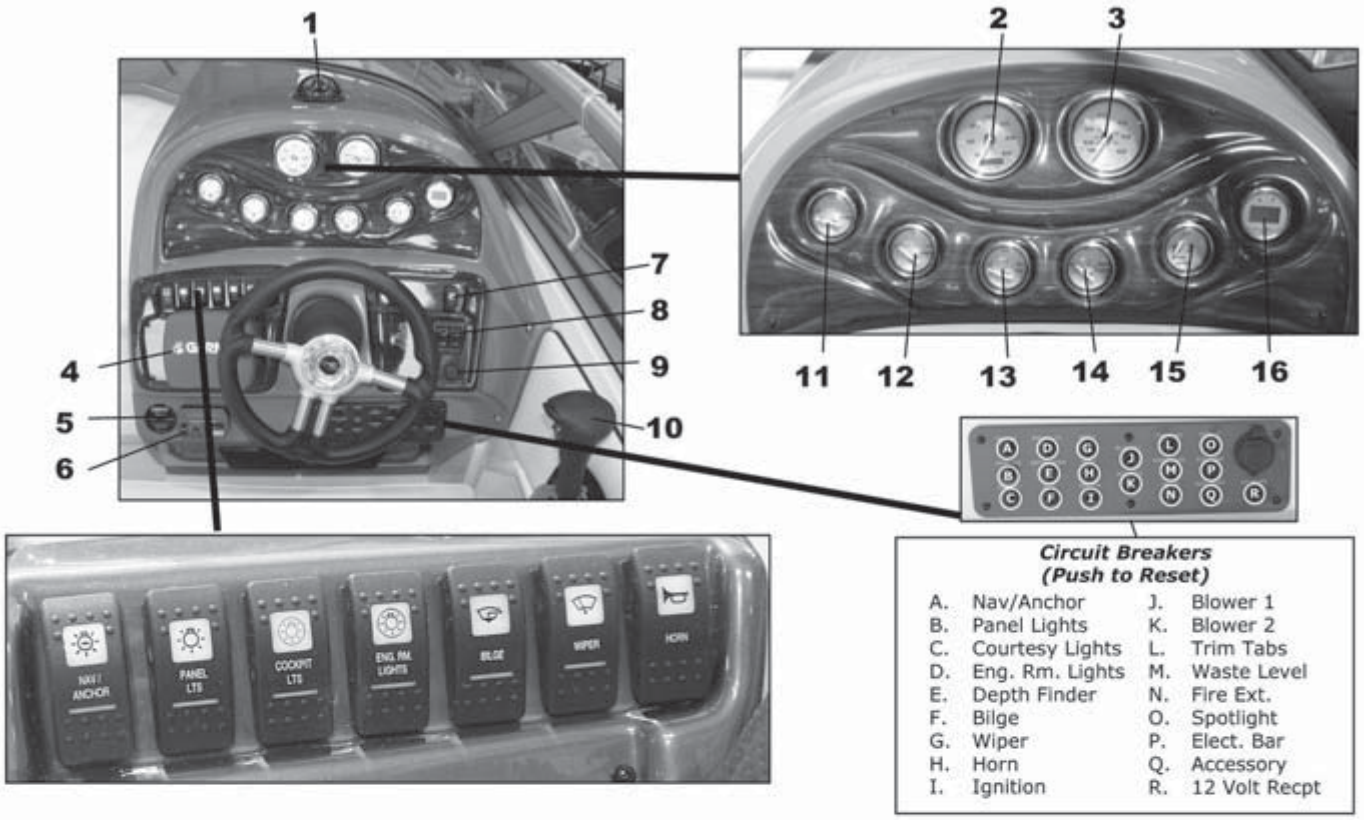

Circuit Breakers (Push to Reset)

A.	Nav/Anchor	J.	Blower 1
B.	Panel Lights	K.	Blower 2
C.	Courtesy Lights	L.	Trim Tabs
D.	Eng. Rm. Lights	M.	Waste Level
E.	Depth Finder	N.	Fire Ext.
F.	Bilge	O.	Spotlight
G.	Wiper	P.	Elect. Bar
H.	Horn	Q.	Accessory
I.	Ignition	R.	12 Volt Recpt

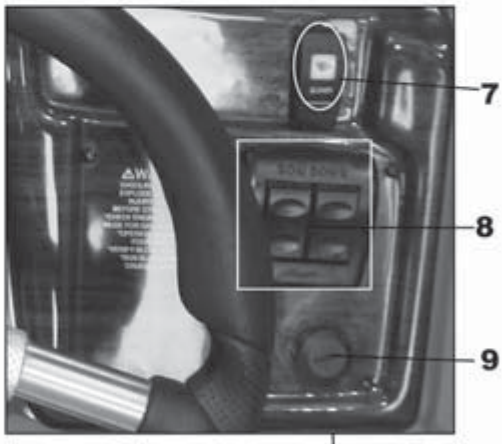

Ignition Switch
Off
On
Crank to Start

1. **COMPASS**
2. **TACH W/ HOUR METER**
3. **SPEEDOMETER**
4. **GARMIN GPS CHART PLOTTER (OPT)**
5. **FIRE EXTINGUISHER INDICATOR**
6. **IN DASH STEREO REMOTE (OPT)**
7. **BLOWER SWITCH AND INDICATOR LTS.**
8. **TRIM TAB SWITCHES**
9. **IGNITION SWITCH**
10. **THROTTLE AND SHIFT CONTROL**
11. **FUEL GAUGE**
12. **VOLT GAUGE**
13. **ENG. OIL PRESSURE GAUGE**
14. **ENG. TEMP GAUGE**
15. **STERN DRIVE TRIM GAUGE**
16. **DEPTH SOUNDER**

250/270 Interior

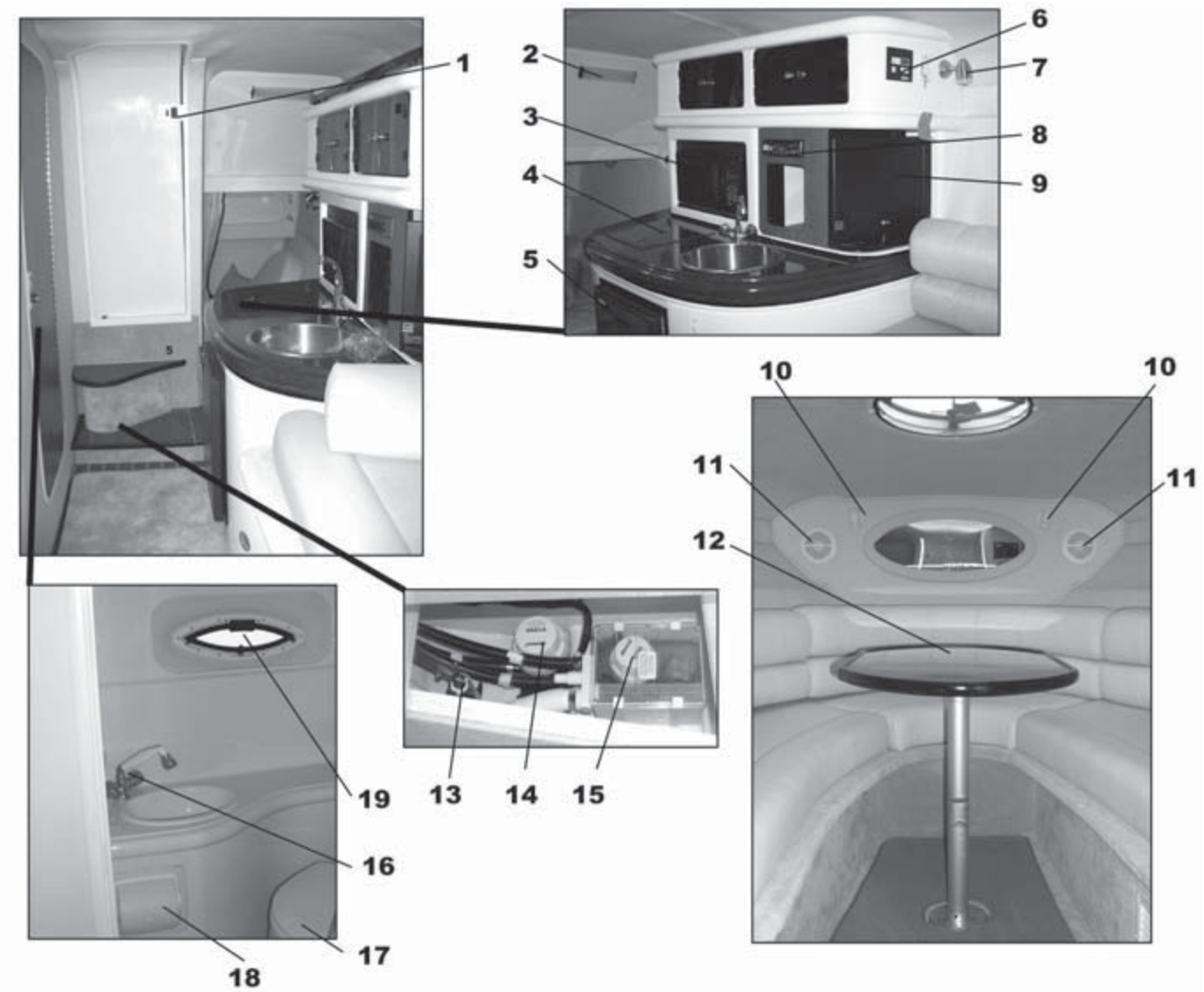

1. SLIDING CABIN DOOR
2. GALLEY LIGHT
3. MICROWAVE (AC POWER ONLY)
4. STOVE (AC POWER ONLY)
5. REFRIDGERATOR (AC/DC POWER)
6. AIR CONDITIONING CONTROLS (OPT)
7. CABIN LIGHT
8. DVD PLAYER (OPT)
9. FLAT SCREEN TV (OPT)
10. CABIN LIGHT
11. CABIN STEREO SPEAKERS
12. CABIN TABLE (REMOVES FOR BED)
13. SEACOCK FOR MANUAL FLUSH HEAD
14. MID BILGE PUMP
15. SHOWER SUMP BOX W/ AUTO PUMP
16. HEAD FAUCET (PULL OUT FOR SHOWER)
17. TOILET
18. TOILET PAPER HOLDER
19. PORTHOLE

MONTEREY BOATS

250 Electrical

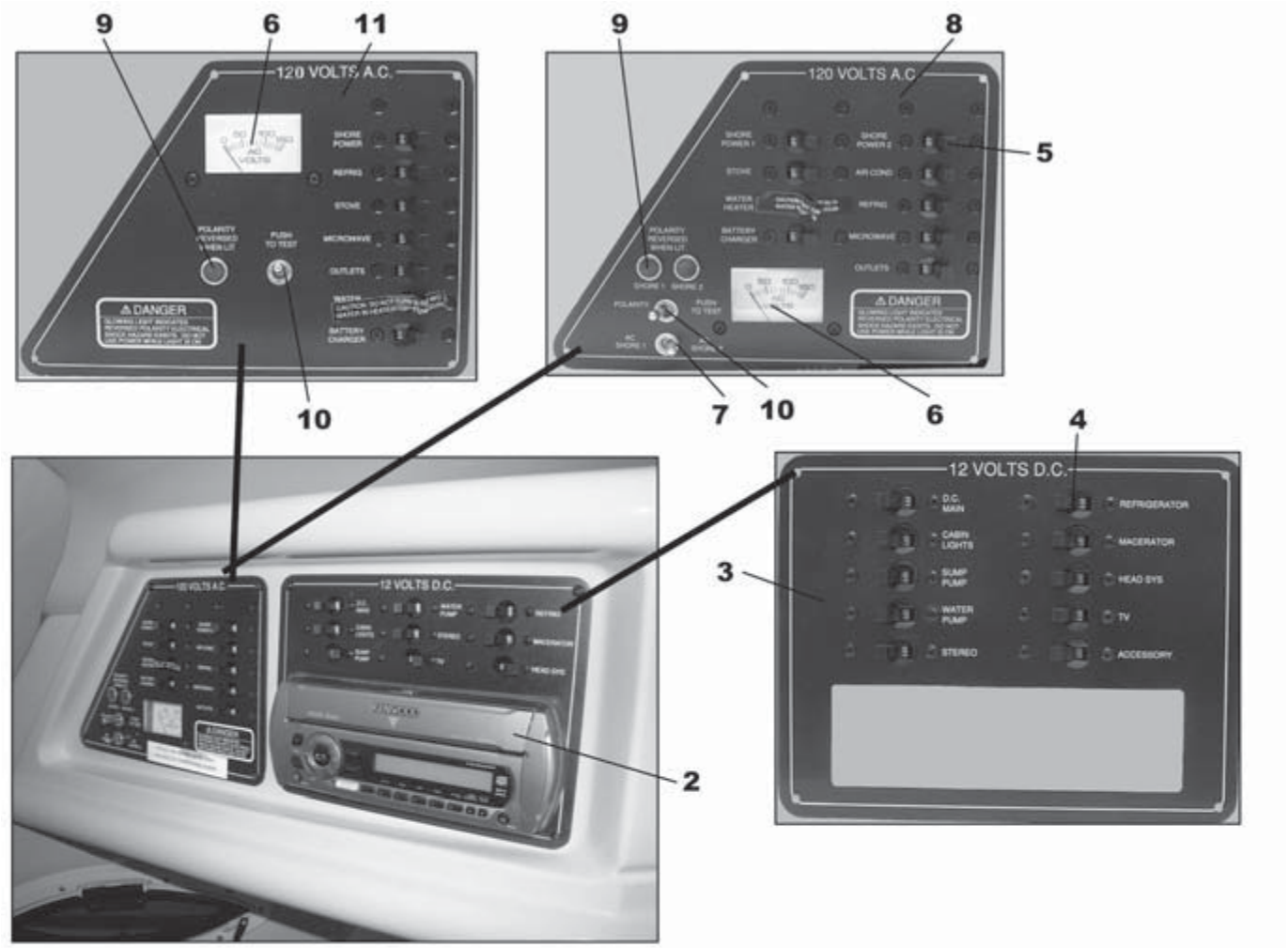

Circuit Breaker Panel

1. Fwd Auto Bilge
2. Aft Auto Bilge
3. CO Monitor #1
4. CO Monitor #2
5. Stereo Memory
6. Accessories
7. Battery Charger #1
8. Battery Charger #2
9. DC Main
10. Windlass (Optional)

1. BATTERY SWITCH PANEL
2. STEREO
3. 12V ELECTRICAL PANEL
4. 12V CIRCUIT BREAKER
5. 120V CIRCUIT BREAKER
6. VOLT METER
7. SHORE POWER METER SWITCH
8. AC ELECTRICAL PANEL (W/ AIR)
9. REVERSE POLARITY INDICATOR LT.
10. REVERSE POLARITY TEST SWITCH
11. AC ELEC. PANEL (W/OUT AIR)

270 Electrical

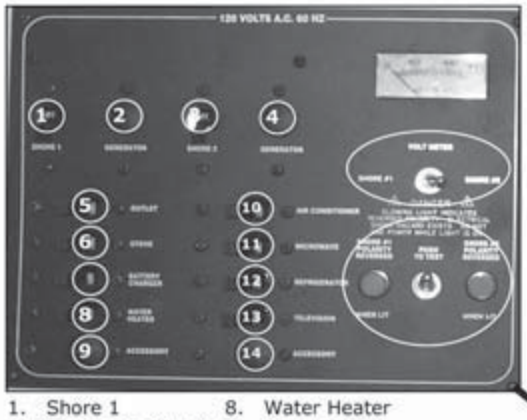

1. Shore 1
2. Generator (Opt.)
3. Shore 2
4. Generator (Opt.)
5. Outlet
6. Stove
7. Battery Charger
8. Water Heater
9. Accessory
10. Air Conditioner
11. Microwave
12. Refrigerator
13. Television
14. Accessory

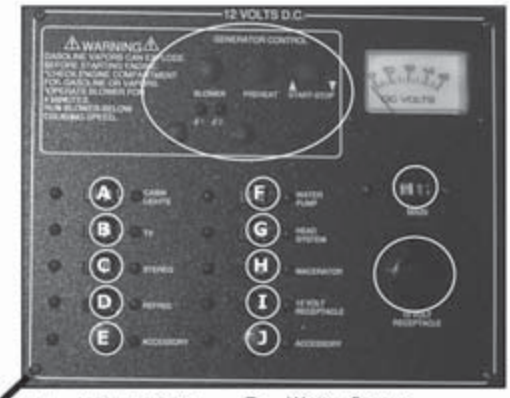

A. Cabin Lights
B. Television
C. Stereo
D. Refrigerator
E. Accessory
F. Water Pump
G. Head System
H. Macerator
I. 12 Volt Receptacle
J. Accessory

Circuit Breaker Panel

1. Fwd Auto Bilge
2. Aft Auto Bilge
3. Sump Pump
4. CO Monitor
5. Stereo Memory
6. Accessories
7. Windlass (Optional)
8. Helm Main
9. Cabin Main

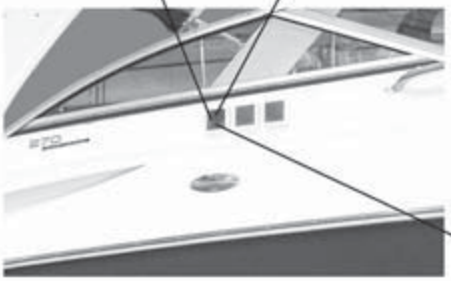

1. **CABIN LIGHT**
2. **STEREO**
3. **COCKPIT TABLE POLE STORAGE**
4. **COCKPIT TABLE**
5. **MAIN BATTERY SWITCH**
6. **GEN. OPT. BATTERY SWITCH**
7. **SHORE POWER INLET**

290 Exterior

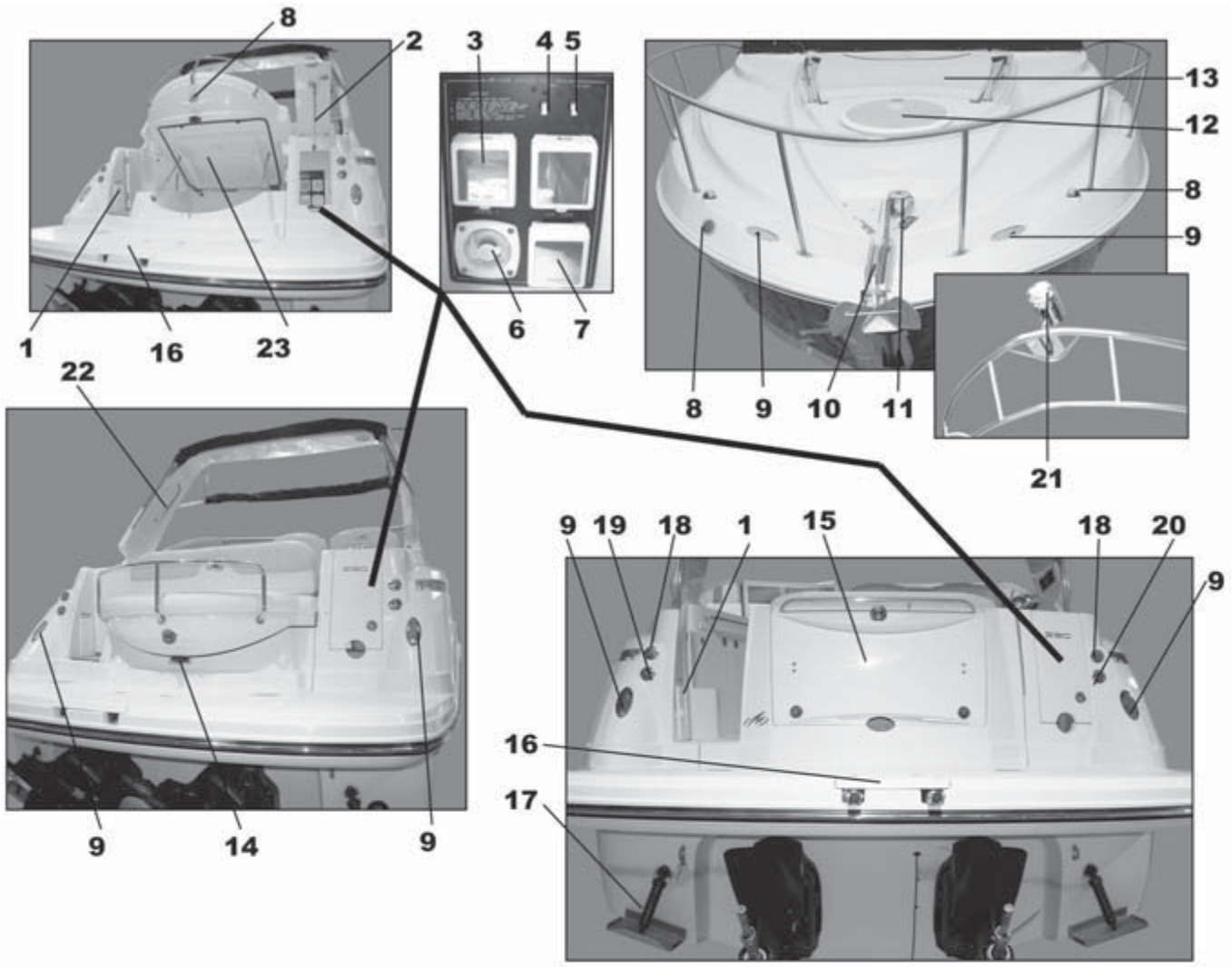

1. TRANSOM SHOWER
2. HATCH LIFT SUPPORT
3. SHORE POWER INLET
4. SHORE POWER (1) BREAKER
5. SHORE POWER (2) BREAKER
6. CITY WATER INLET
7. CABLE TV AND PHONE INLET
8. HORN
9. CLEAT (PULL UP OPTIONAL)
10. ANCHOR ROLLER
11. ANCHOR WINDLASS (OPT)
12. DECK HATCH
13. SUNPAD
14. DUNNAGE LATCH (SUN ISLAND OPT)
15. DUNNAGE
16. TELESCOPIC SWIM LADDER
17. TRIM TAB
18. FUEL FILL
19. FRESH WATER FILL
20. WASTE PUMP OUT FITTING
21. REMOTE SPOTLIGHT (OPT)
22. STAINLESS GRAB RAIL
23. DUNNAGE LID (SUN ISLAND OPT)

290 Engine Room

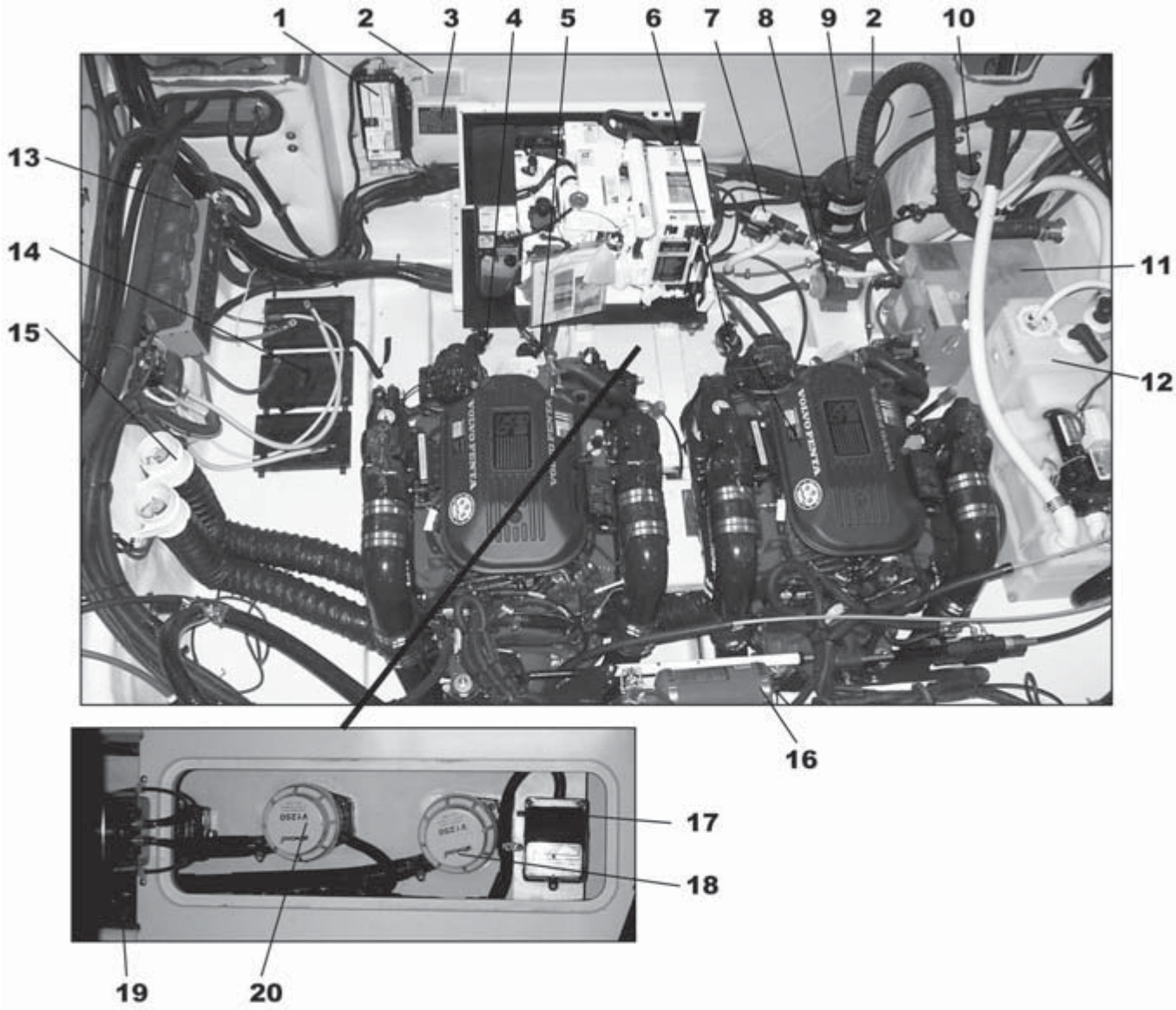

1. BATTERY CHARGER
2. ENG. RM. LIGHT
3. GEN. SEA COCK (OPT)
4. GEN. SEA COCK (OPT)
5. AC SEA COCK (OPT)
6. MACERATOR SEA COCK (OPT)
7. MACERATOR (OPT)
8. AC WATER SUPPLY PUMP
9. GEN. EXHAUST MUFFLER
10. FRESH WATER PUMP
11. WATER HEATER
12. VACU-FLUSH (OPT)
13. ELECTRIC BATTTERY SWITCHES
14. BATTERY TRAYS (BAT. NOT PROVIDED)
15. BLOWERS
16. BILGE PUMP
17. AUTOMATIC FLOAT SWITCH
18. BILGE PUMP
19. BENNETT TRIM TAB PUMP
20. EMERGENCY BILGE PUMP

290 Cockpit/Helm

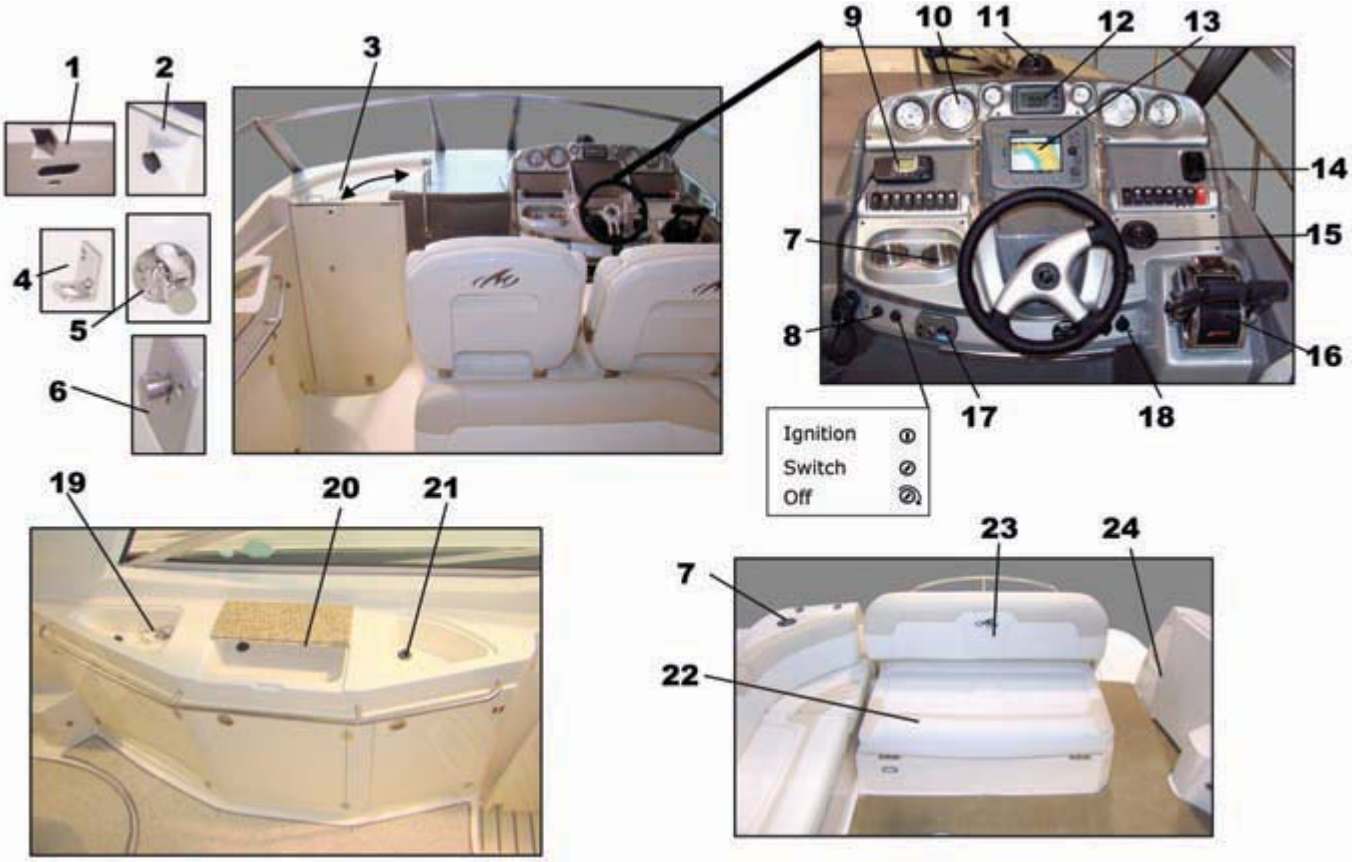

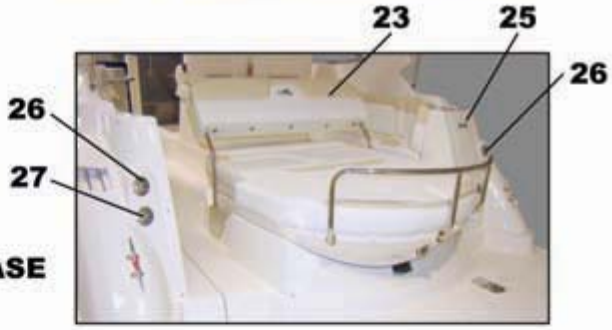

1. CABIN DOOR LATCH
2. BIFOLD CABIN DOOR LATCH
3. SLIDING CABIN DOOR
4. BIFOLD DOOR KEEPER
5. KEEPER (PRESS TO RELEASE)
6. LOWER DOOR CATCH PUSH TO RELEASE
7. CUPHOLDER
8. IGNITION SWITCHES
9. VHF RADIO (OPT)
10. GAUGES (SEE OTHER PAGES)
11. COMPASS
12. RAYMARINE BIDATA UNIT
13. RAYMARINE NAV UNIT (OPT)
14. TRIM TAB INDICATORS
15. FIRE EXTINGUISHER MONITOR
16. THROTTLE / SHIFT CONTROL
17. KENWOOD STEREO REMOTE (OPT)
18. 12V POWER OUTLET
19. WETBAR SINK FAUCET
20. WETBAR COOLER
21. WETBAR COOLER
22. STORAGE UNDER SEAT
23. 3 POSITION REAR SEAT BACK
24. TRANSOM SHOWER
25. DOCKSIDE POWER INLETS
26. FUEL FILL
27. FRESHWATER FILL

290 Cockpit/Helm

Bidata Display

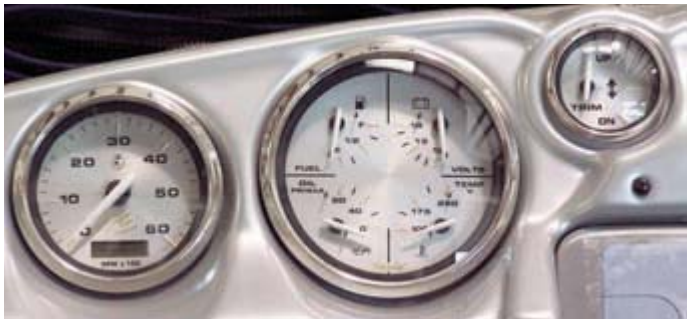

Engine Gauges

Helm Breaker Panel

Stbd Side Switch Panel

Port Side Switch Panel

290 Cockpit/Helm

Starboard engine will charge the house battery if the engine is running and the engine battery voltage exceeds 13.7 volts.

Manual Switch – Normal Position is "Auto"
When in the On Position, Move to Off before switching to Auto Position

Not Shown: Windlass Main Circuit Breaker, Windlass Relay, Ground Bus, and Battery Cable Ground Bus.

Panel Circuit Breaker
Push to Reset

290 Interior

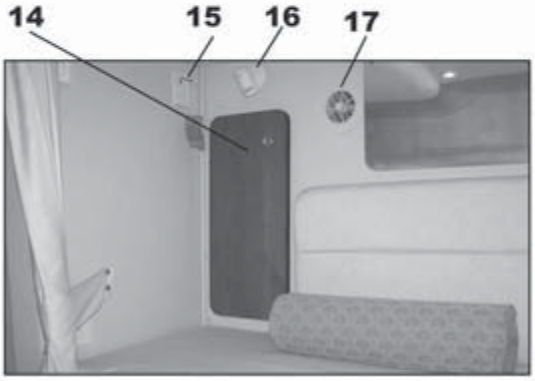

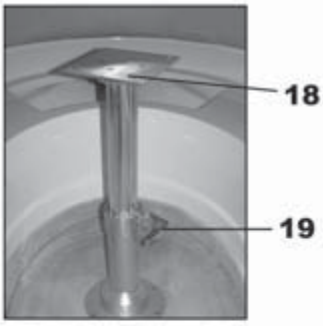

1. HEAD STORAGE CABINET
2. AIR CONDITIONING DUCT
3. GFI ELECTRICAL OUTLET
4. WASTE TANK LEVEL MONITOR
5. SINK/SHOWER FAUCET
6. EXHAUST VENT
7. VANITY STORAGE
8. TOILET
9. FOLD DOWN SHOWER SEAT
10. CABIN LIGHT
11. FLAT PANEL TV (OPT)
12. CABIN LIGHT SWITCHES
13. PORTHOLE
14. HANGING LOCKER
15. CO DETECTOR
16. CABIN LIGHT
17. AIR CONDITIONING VENT
18. CABIN TABLE BASE (TABLE REMOVED)
19. TABLE HEIGHT ADJUSTMENT LEVER

290 Interior

12 Volt Electrical Switch Panel (DC)

A. DC Main
B. Cabin Lighting
C. Stereo
D. Water Pump
E. TV/DVD
F. Head System
G. Macerator
H. Cabin Refrigerator
I. Cockpit Refrigerator
J. Amplifier
K. Head Fan
L. Bilge Blowers
M. Bilge Blowers
N. Gen Start/Run
O. Port Battery
P. Stbd Battery
Q. House/Gen Battery
R. DVD Player
S. A/B Switch

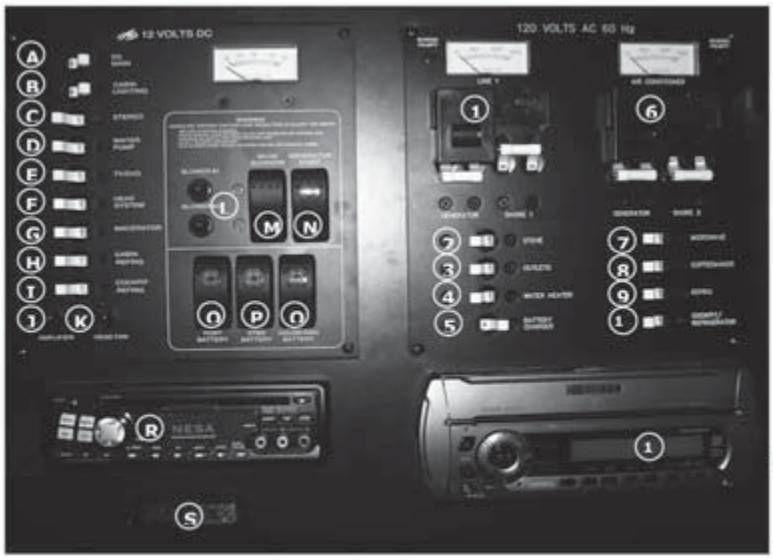

120 Volt Electrical Switch Panel (AC)

1. Shore Power/Generator Slide Lock
2. Stove
3. Outlet/ Refrigerator
4. Water Heater*
5. Battery Charger
6. Shore Power/Generator Slide Lock
7. Microwave
8. Coffeemaker
9. Cabin Refrigerator
10. Cockpit Refrigerator/ Icemaker
11. Stereo

*Note: *Turn on only when system is full of water or heating element will burn out.*

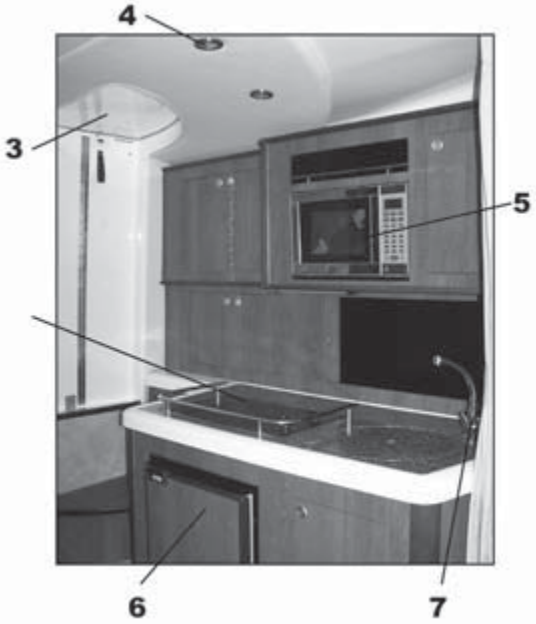

1. **ELECTRICAL OUTLER**
2. **CABIN LIGHT SWITCHES**
3. **CABIN DOOR**
4. **OVERHEAD CABIN LIGHT**
5. **MICROWAVE**
6. **CABIN REFRIDGERATOR (AC/DC)**
7. **GALLEY SINK FAUCET**

250 AC Distribution Panel

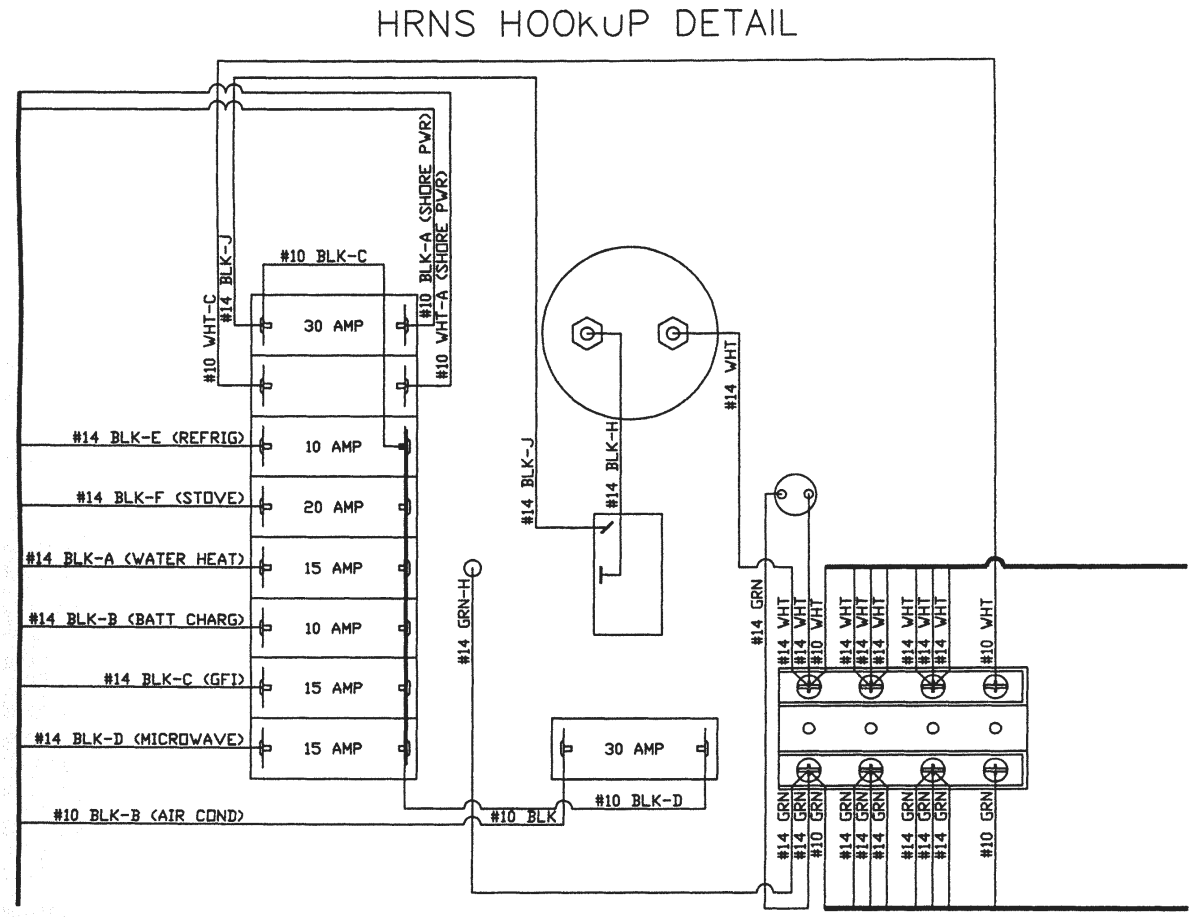

250 DC Distribution Panel

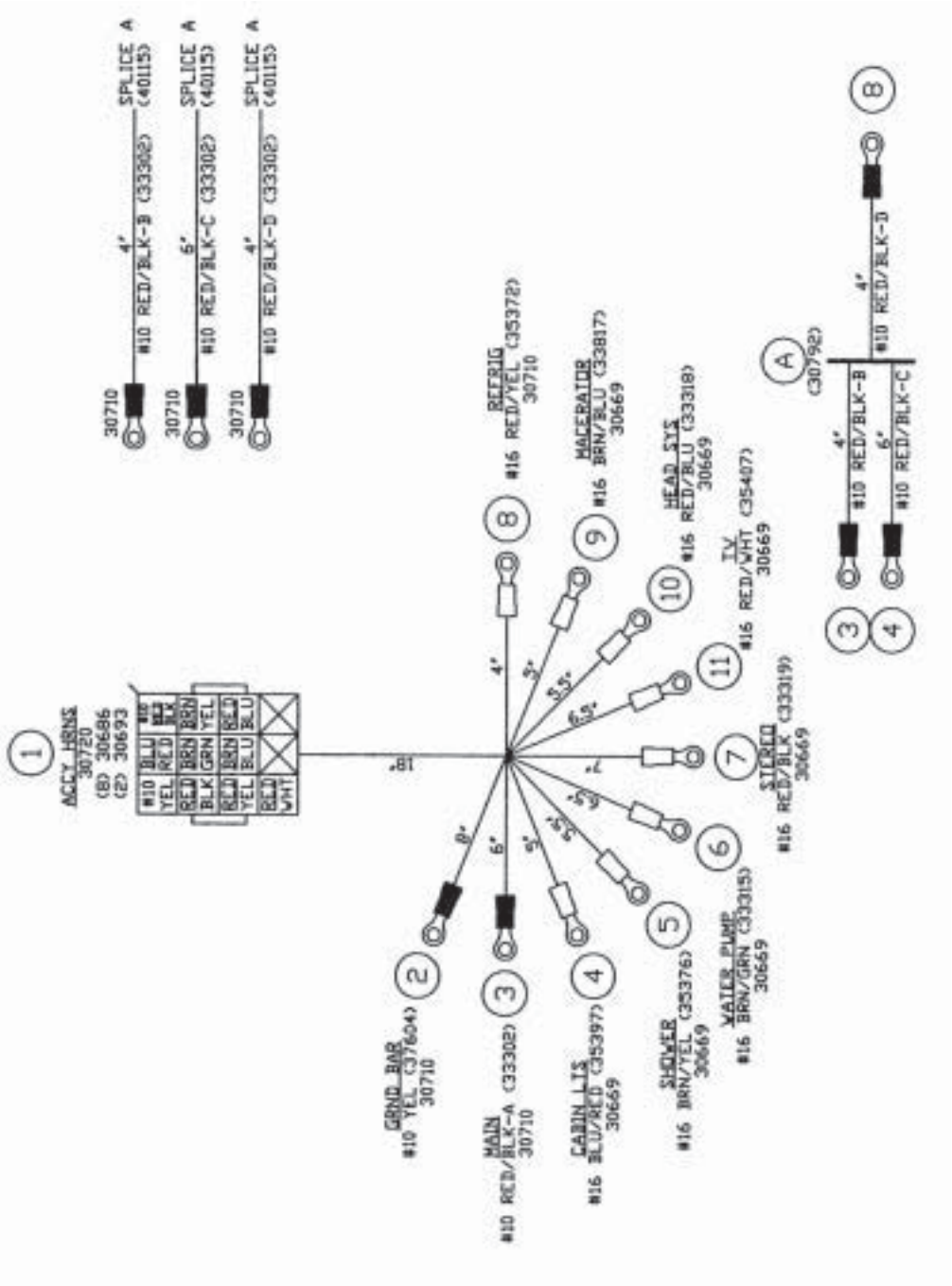

250 DC Wiring Harness

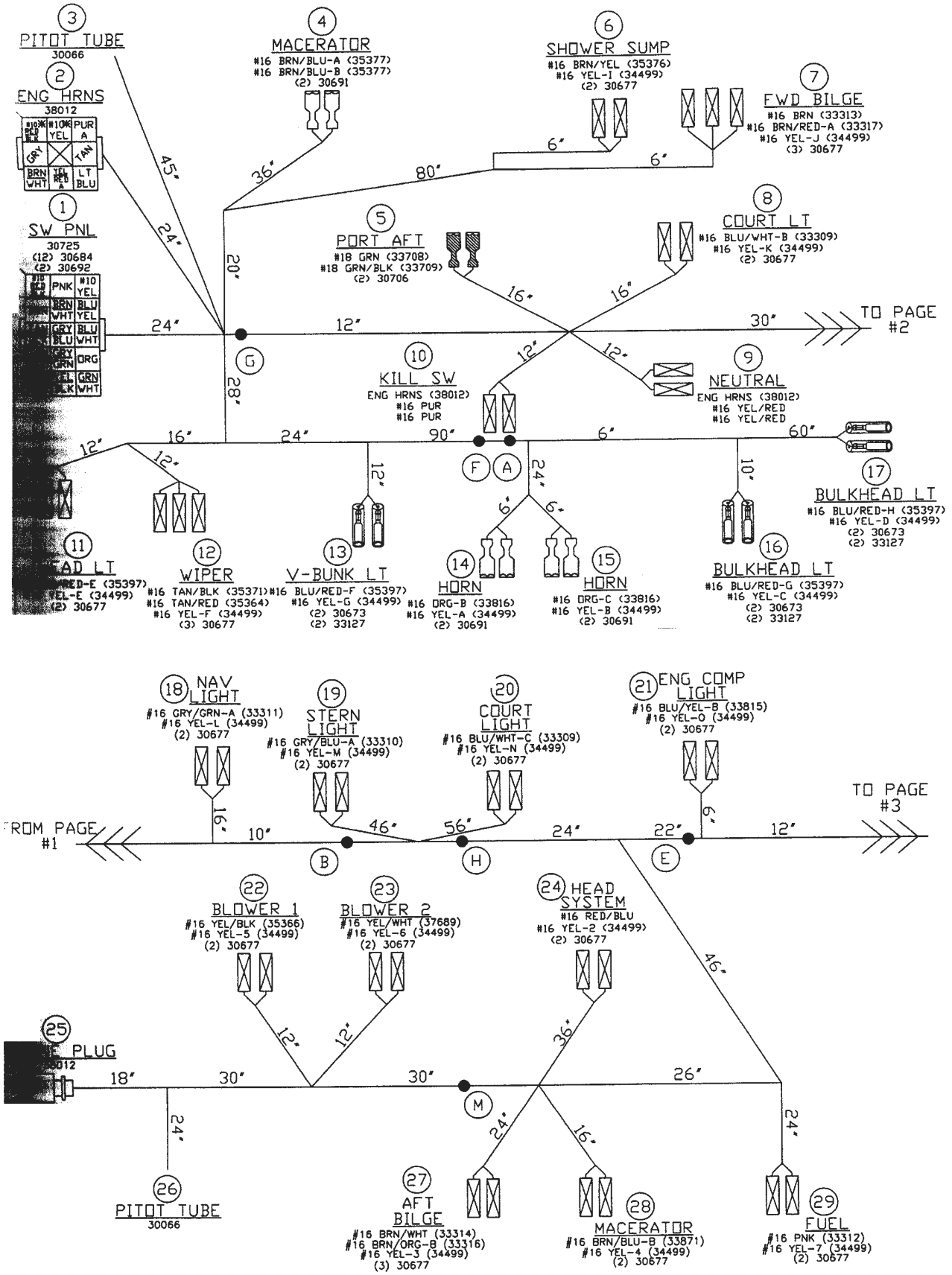

250 DC Wiring Harness

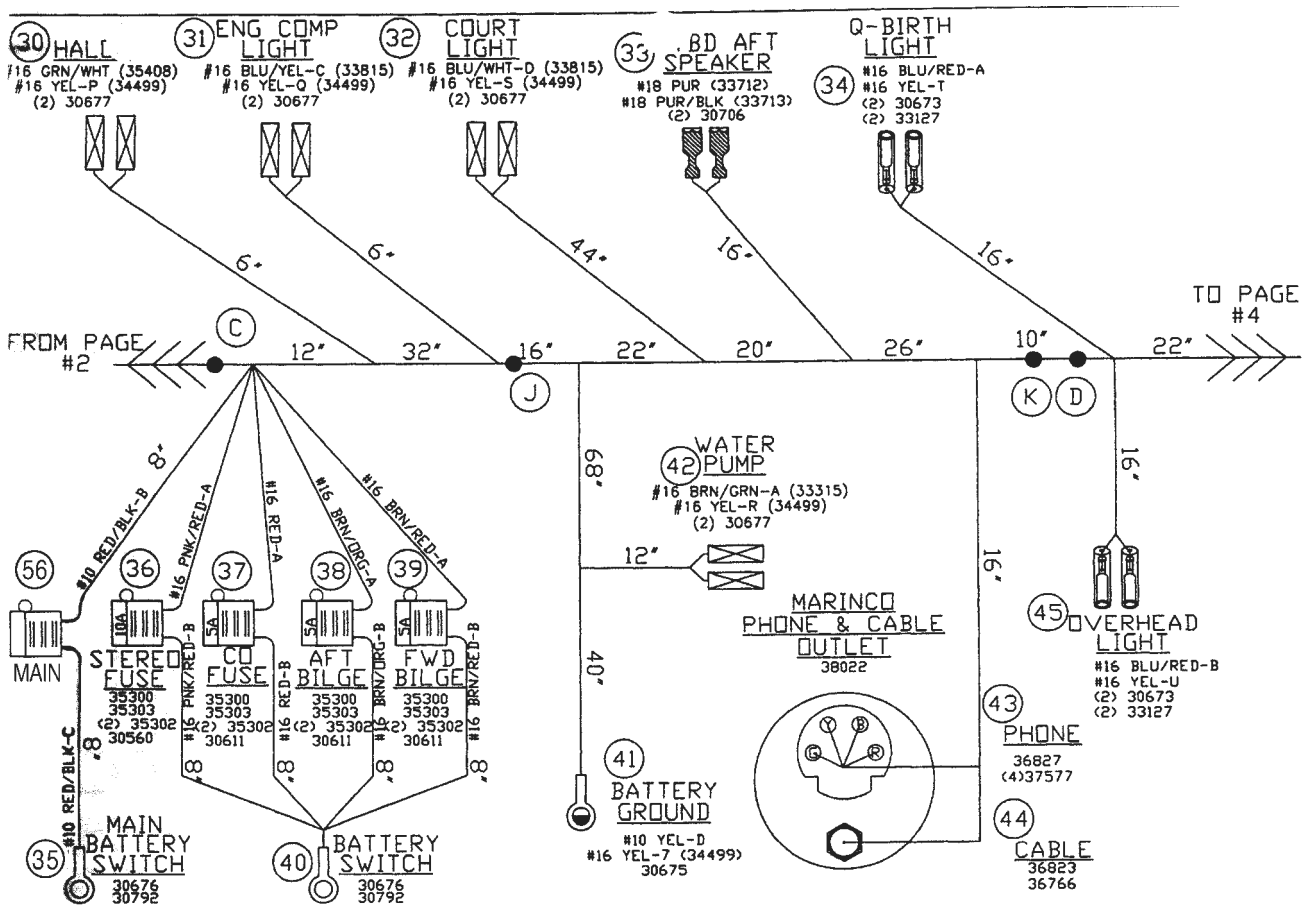

250 Ignition Panel Harness

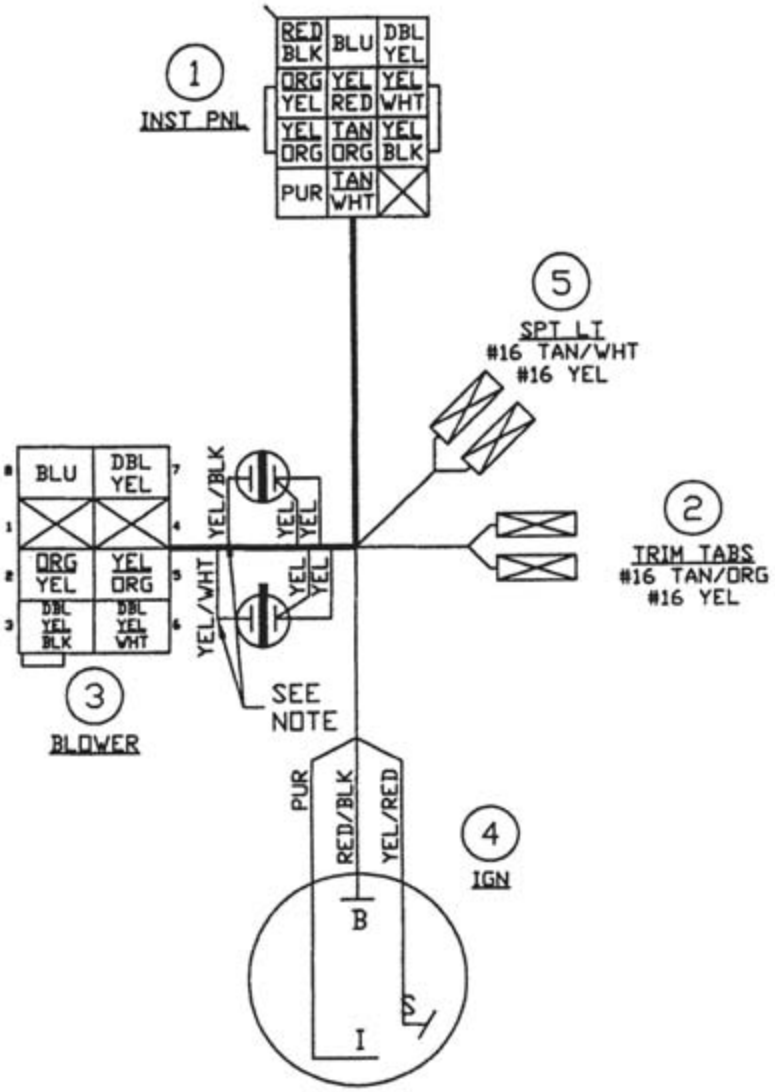

250 Switch Panel Harness

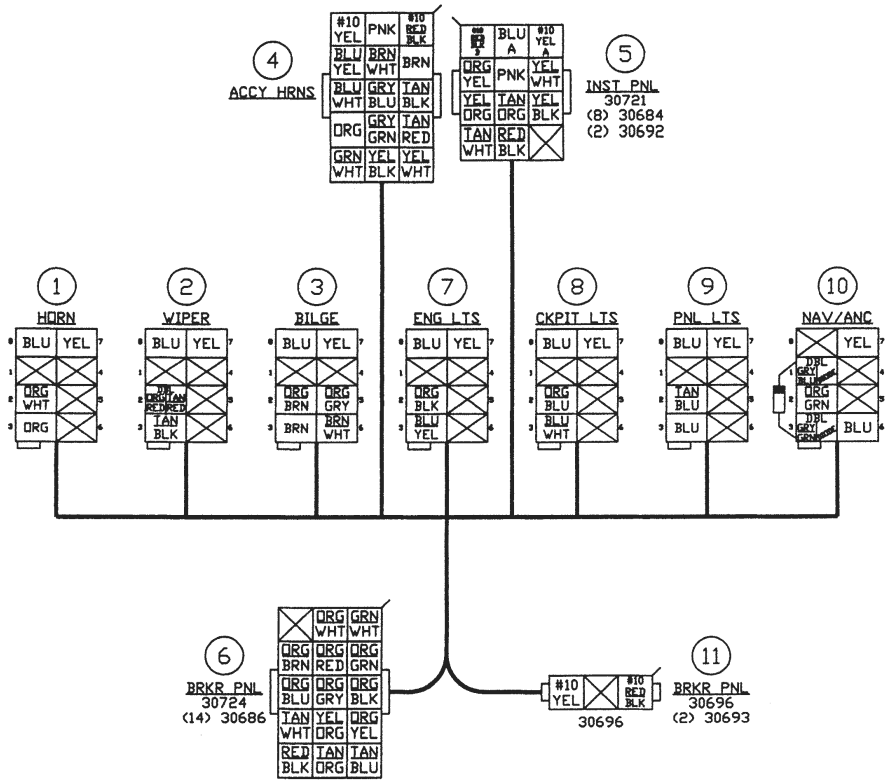

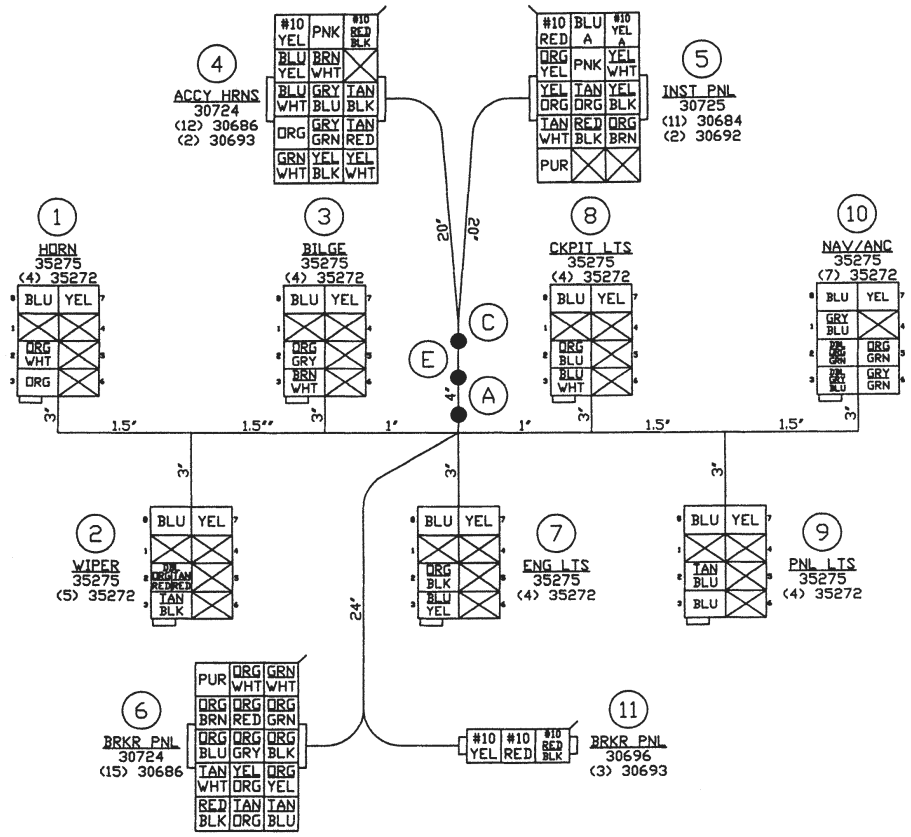

250 DC Breaker Panel Harness

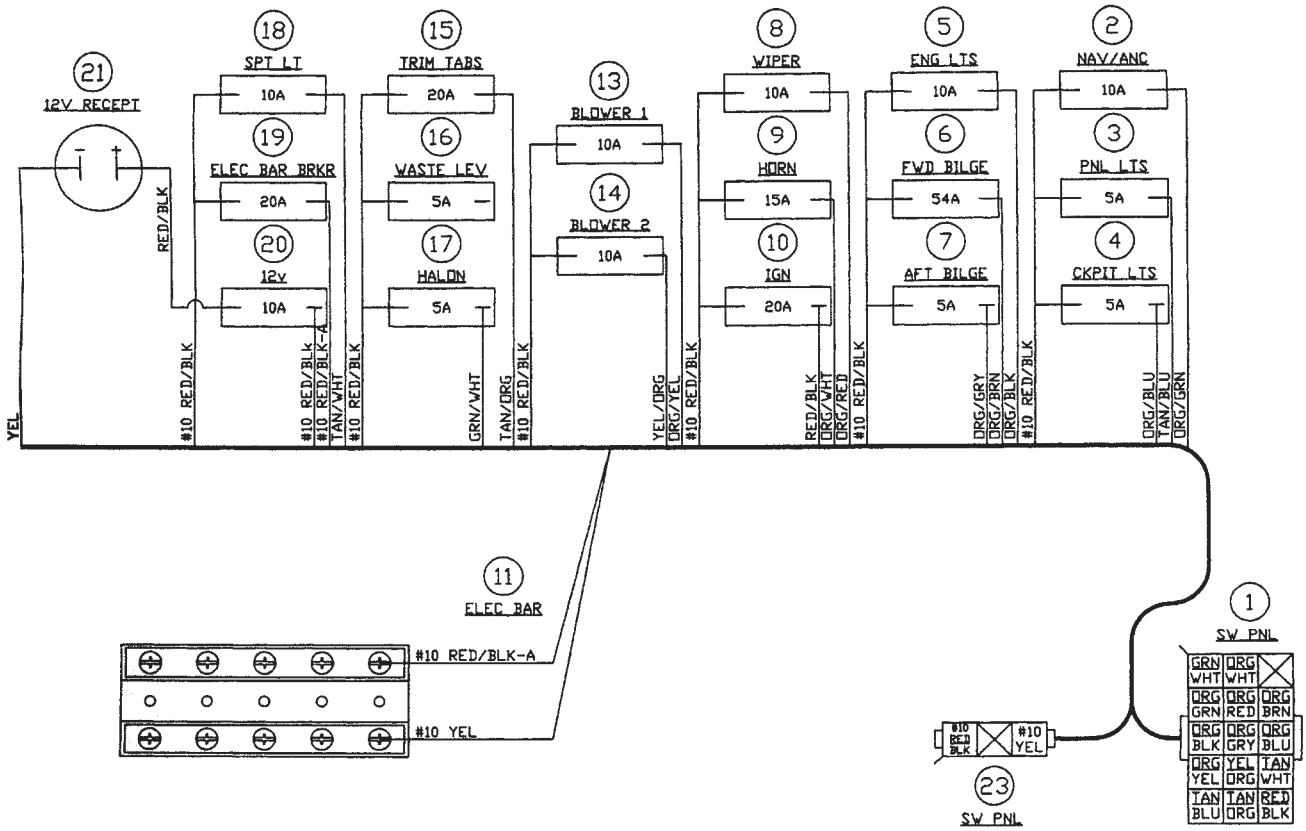

250 DC Main Harness

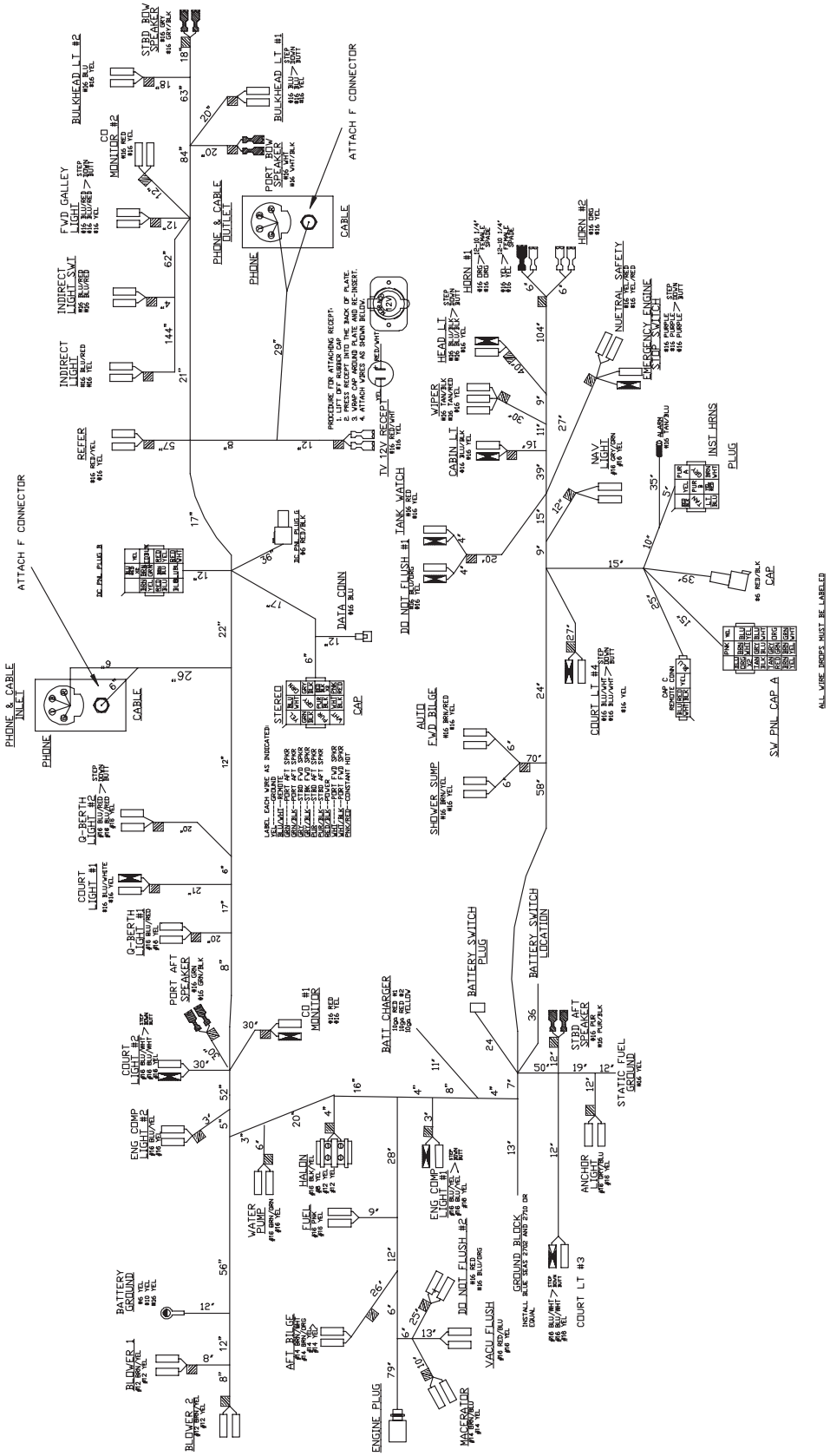

270 AC Wiring Harness

#8 green

WATER HEATER
BLACK
GREEN
WHITE

BATTERY CHARGER
BLACK
GREEN
WHITE

AC PANEL

GFI OUTLET
BLACK 1
GREEN 2
WHITE 3

MICRO
BLACK 1
GREEN 2
WHITE 3

FRIG
BLACK 1
GREEN 2
WHITE 3

TV
BLACK 1
GREEN 2
WHITE 3

STOVE
BLACK
GREEN
WHITE

270 AC Panel Harness

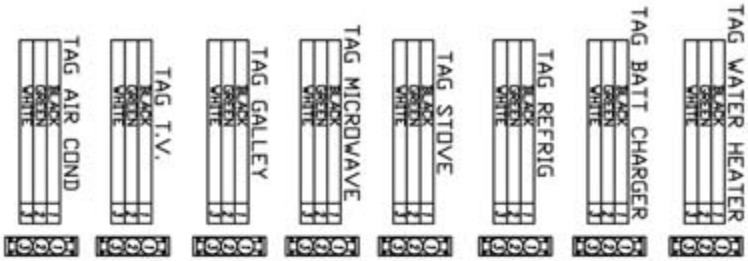

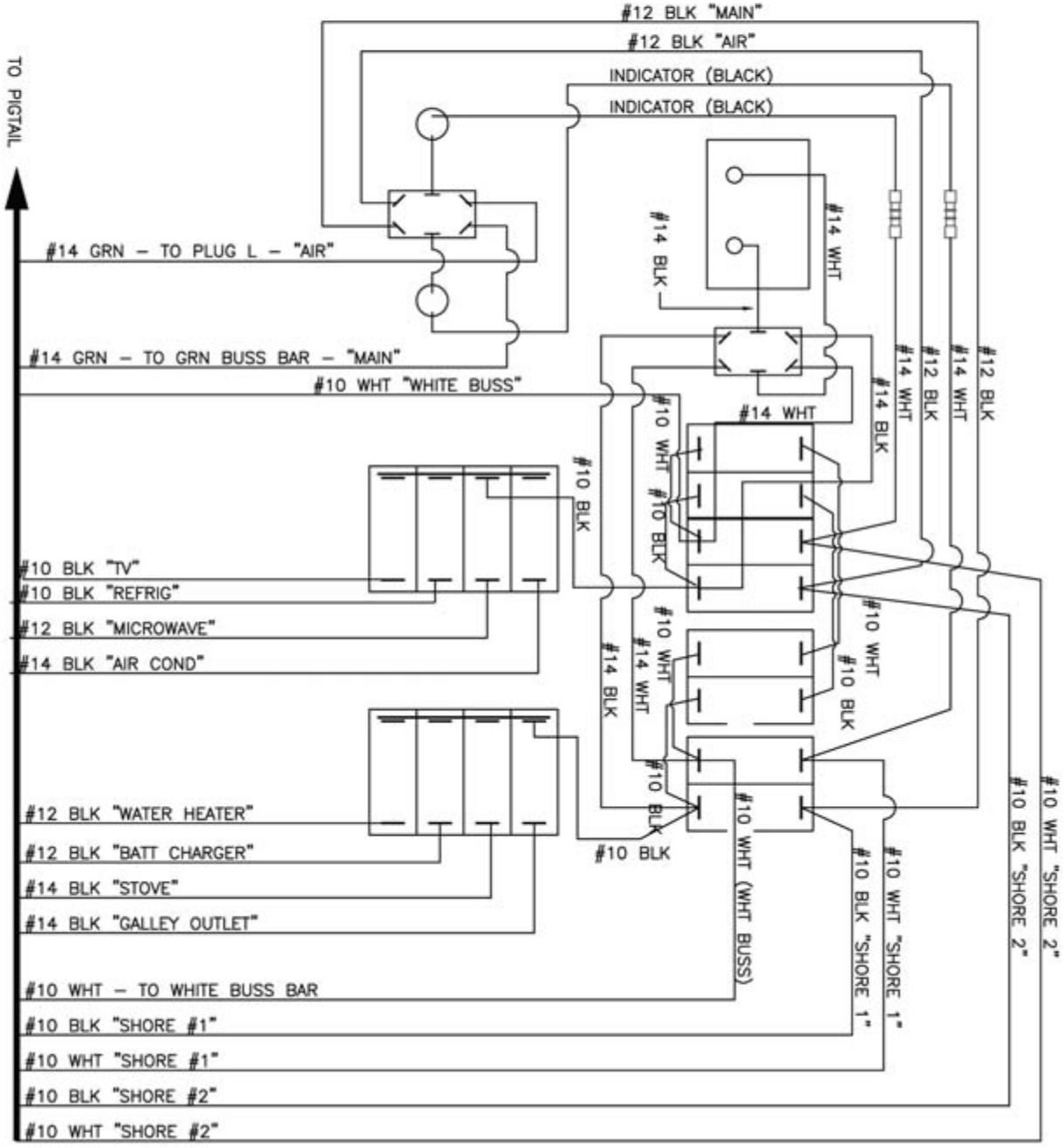

270 Breaker Panel Harness

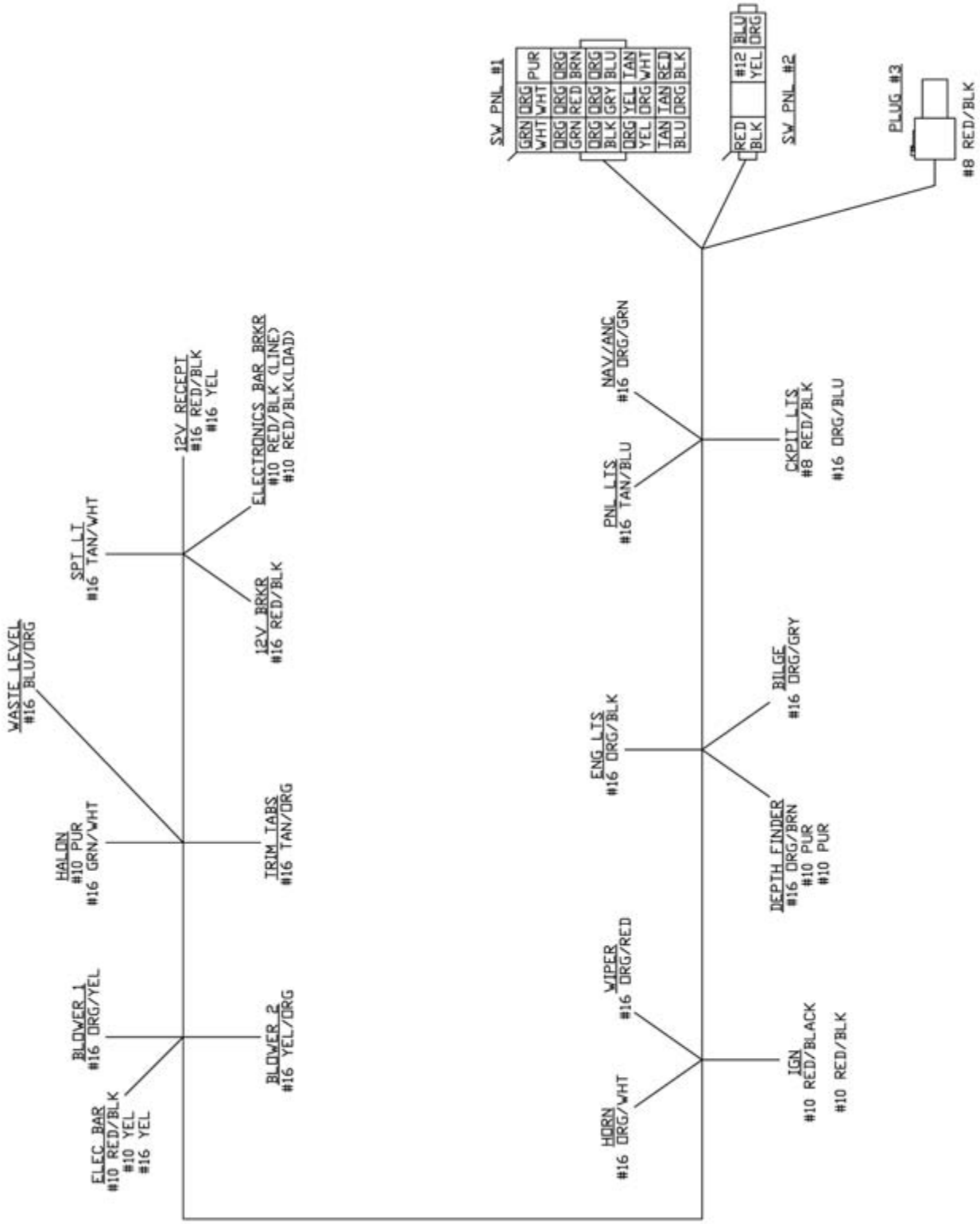

270 Ignition Switch Panel Harness

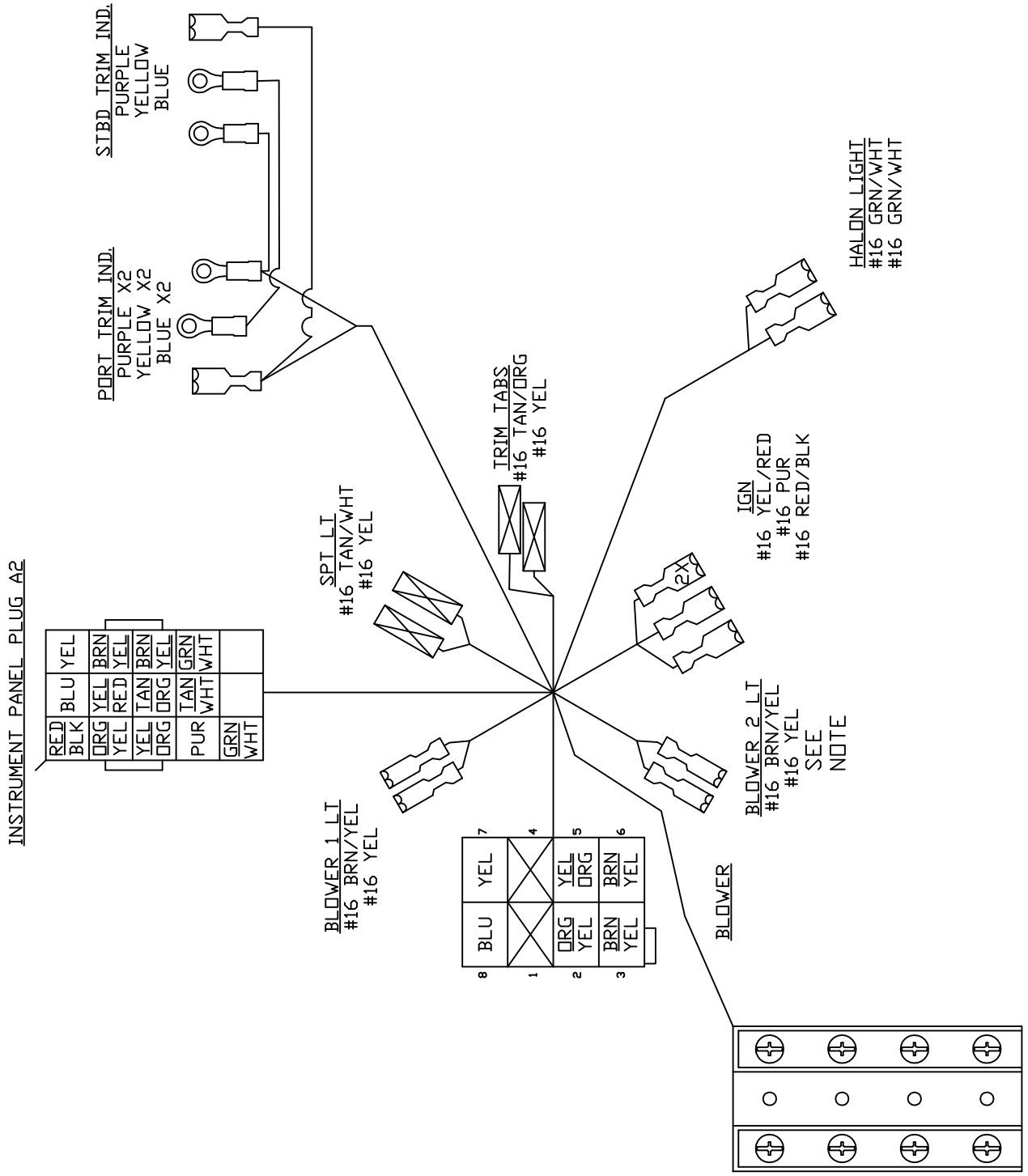

270 Instrument Panel Harness

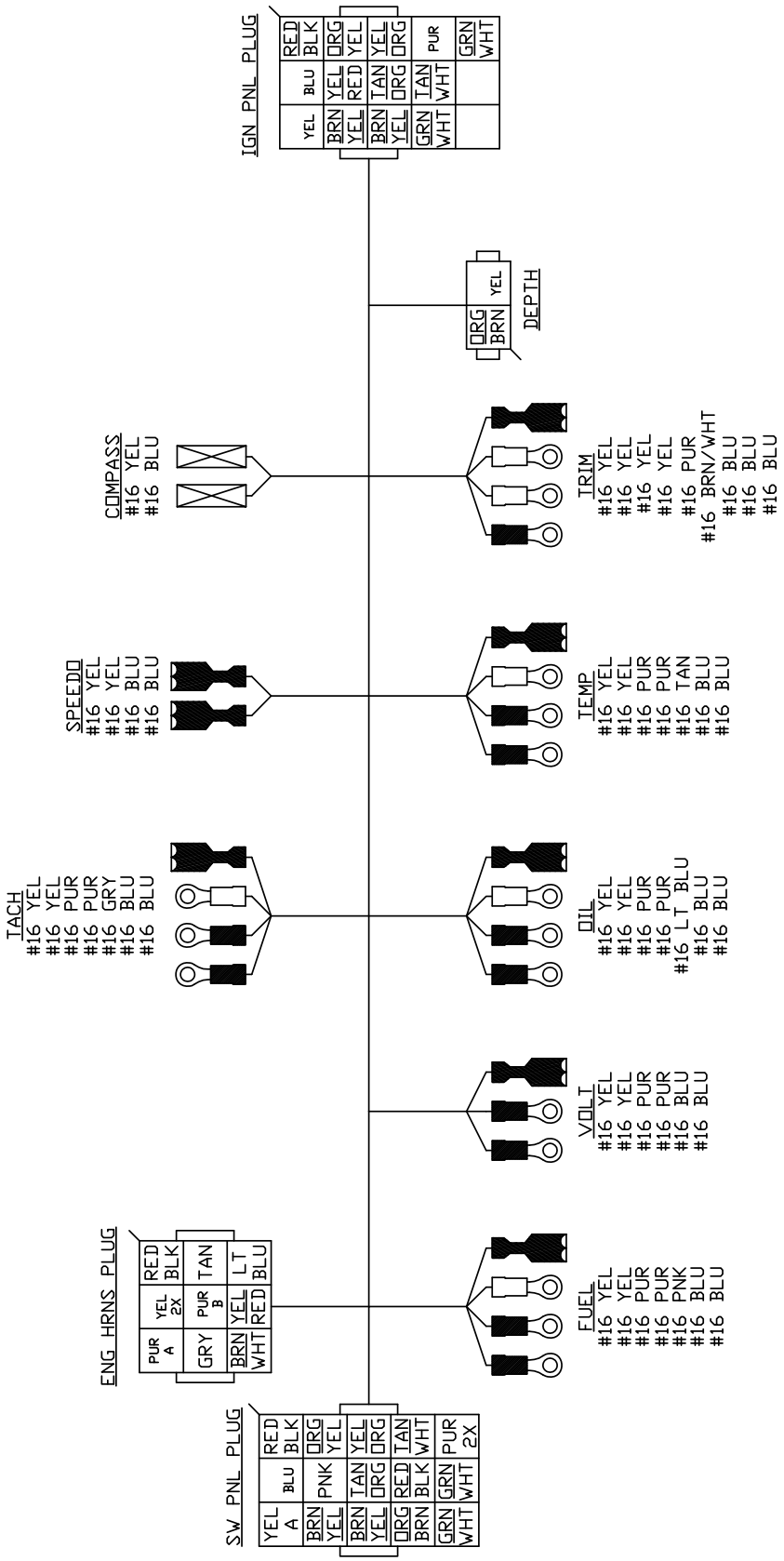

270 ACC Switch Panel Harness

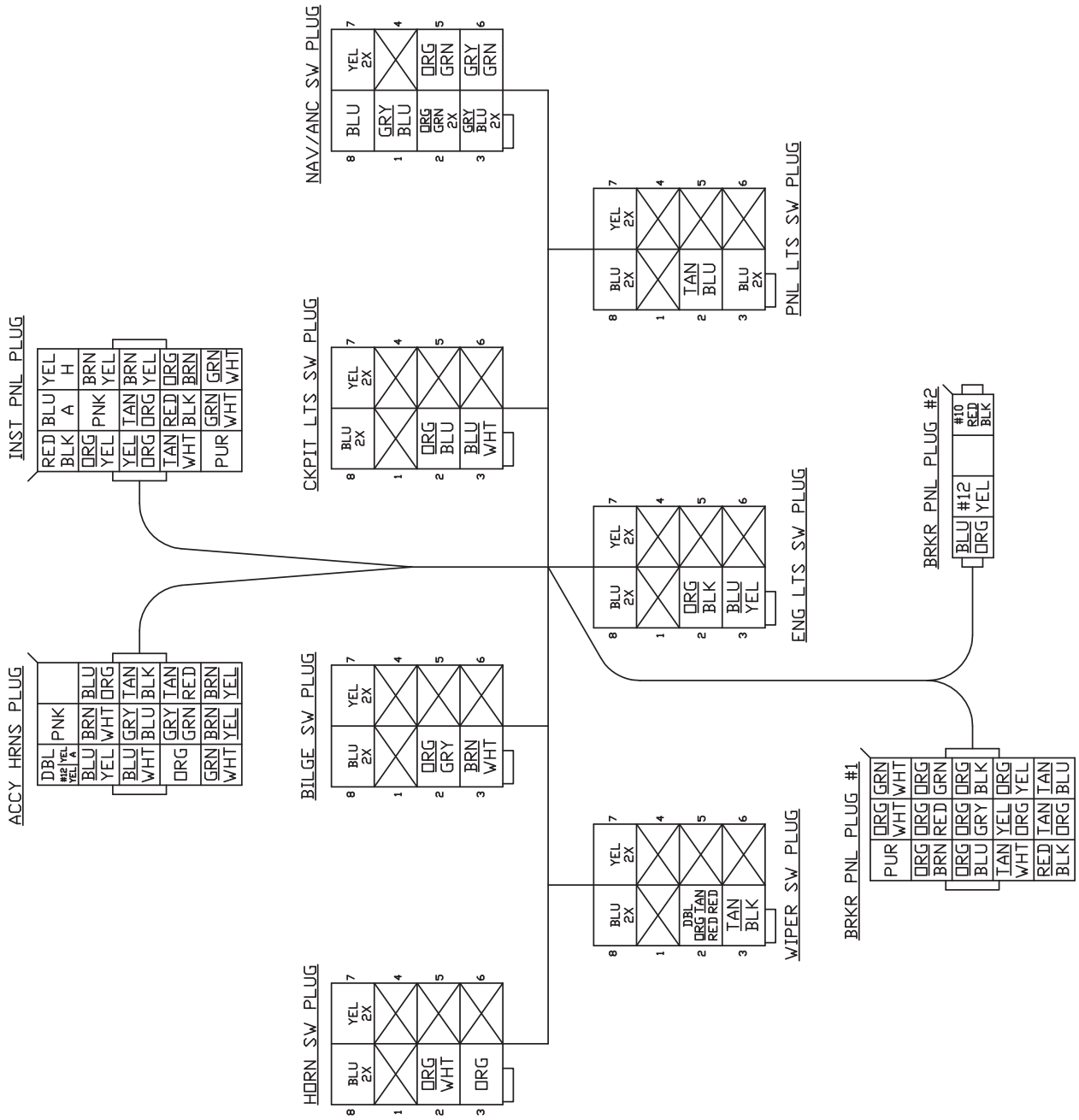

270 DC Harness

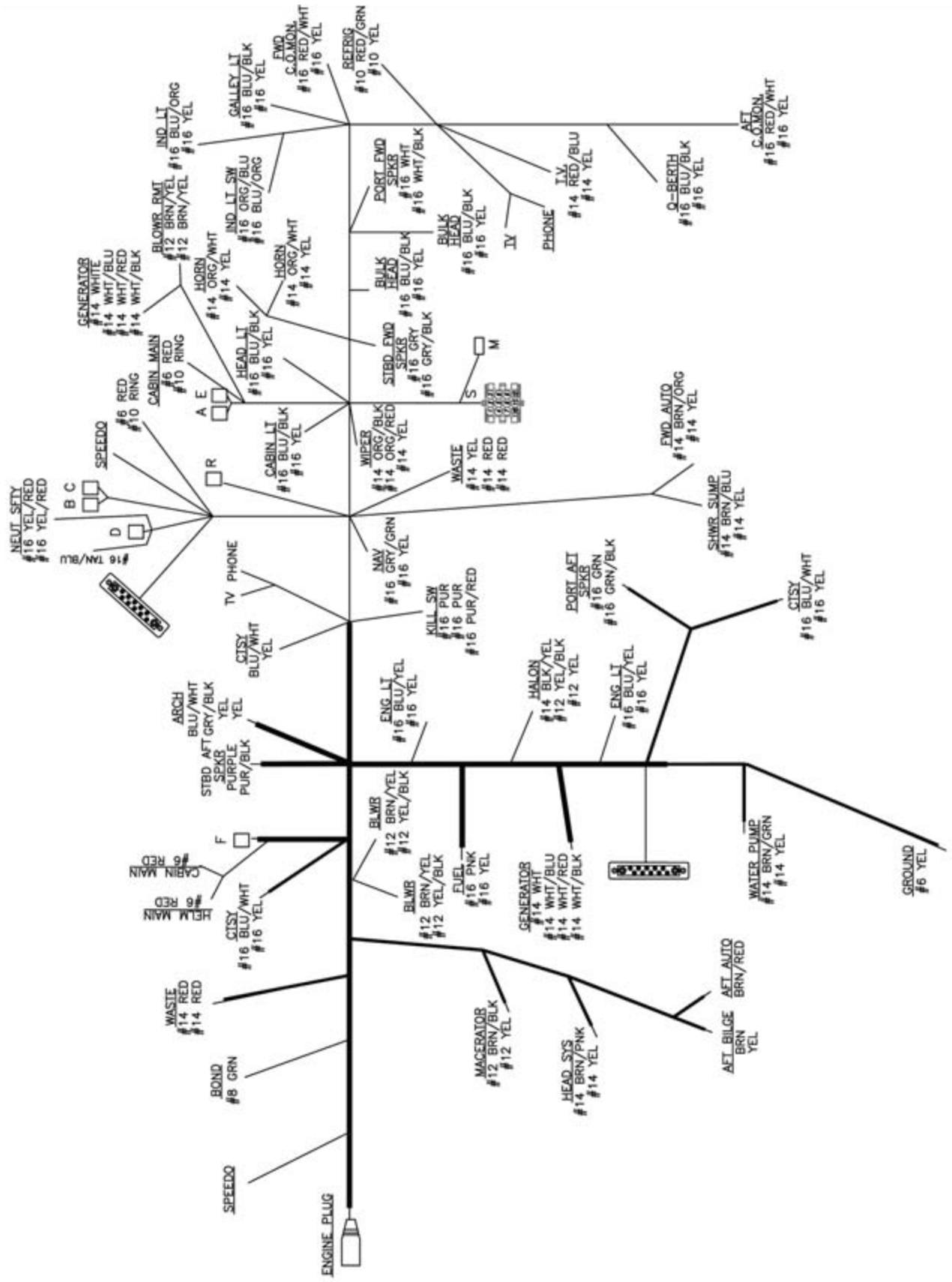

270 DC Panel Harness

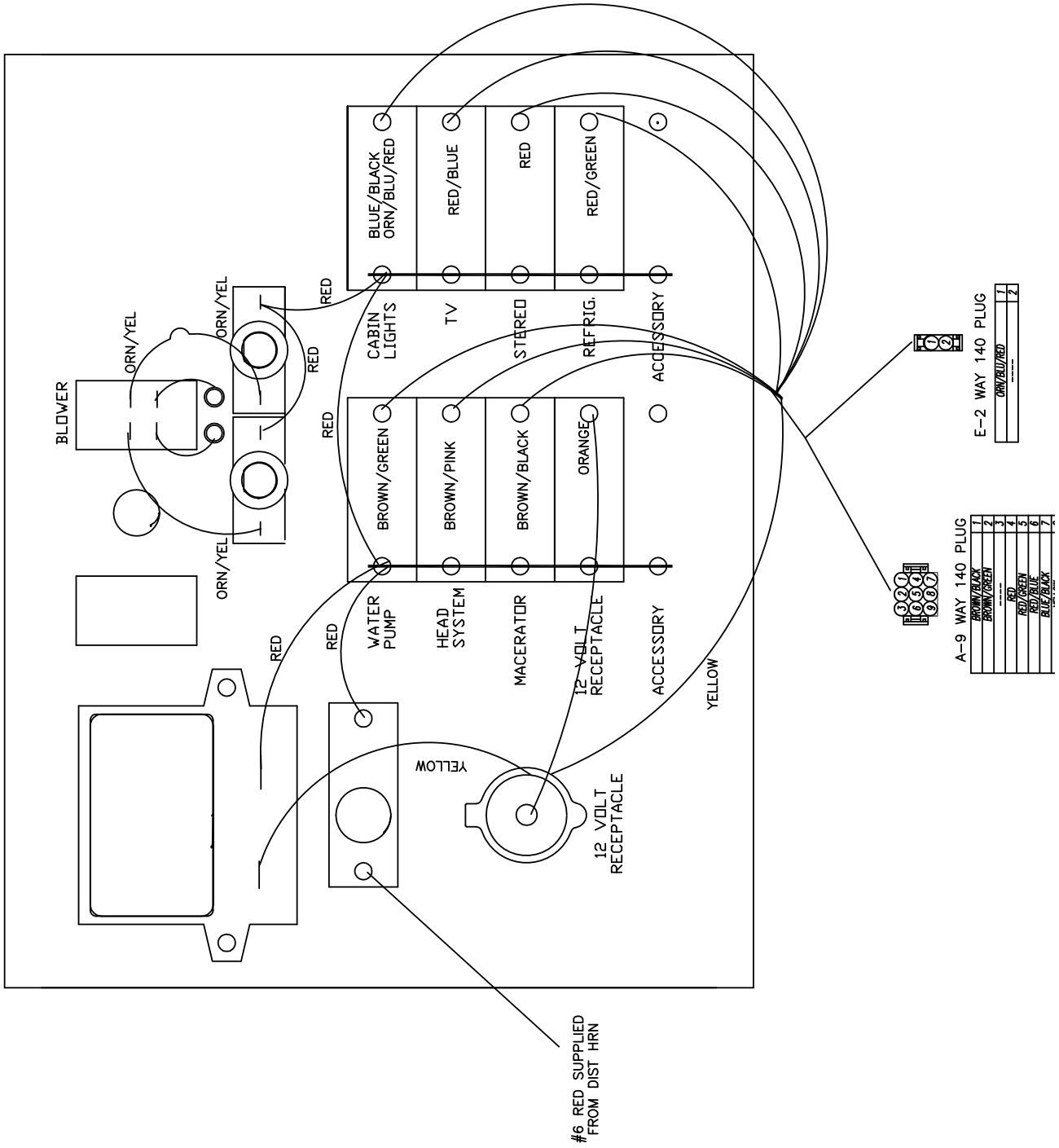

270 Water System Connection Diagram

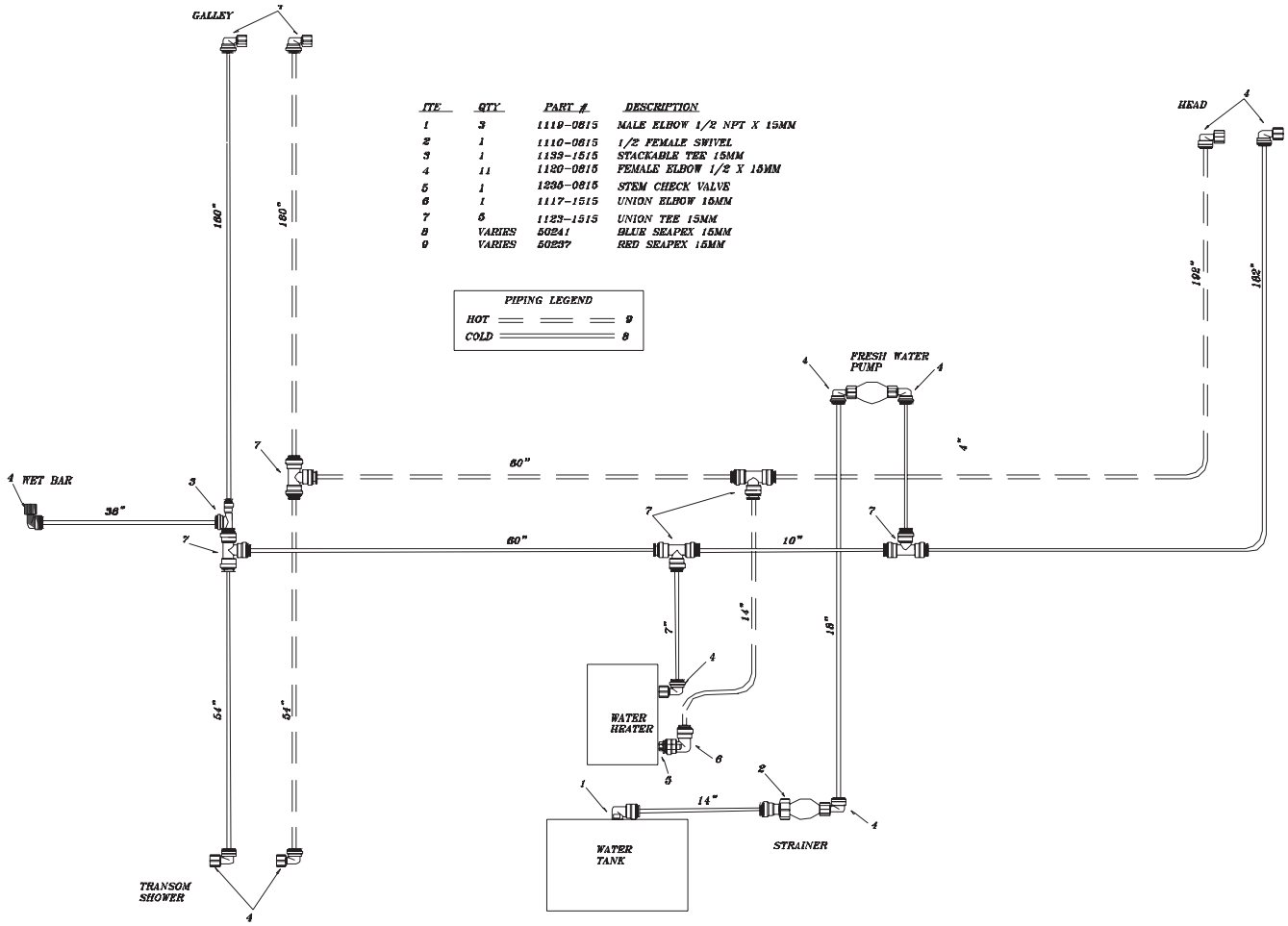

ITE	QTY	PART #	DESCRIPTION
1	3	1119-0815	MALE ELBOW 1/2 NPT X 15MM
2	1	1110-0815	1/2 FEMALE SWIVEL
3	1	1133-1515	STACKABLE TEE 15MM
4	11	1120-0815	FEMALE ELBOW 1/2 X 15MM
5	1	1235-0815	STEM CHECK VALVE
6	1	1117-1515	UNION ELBOW 15MM
7	5	1123-1515	UNION TEE 15MM
8	VARIES	50241	BLUE SEAPEX 15MM
9	VARIES	50237	RED SEAPEX 15MM

290 120V AC Panel

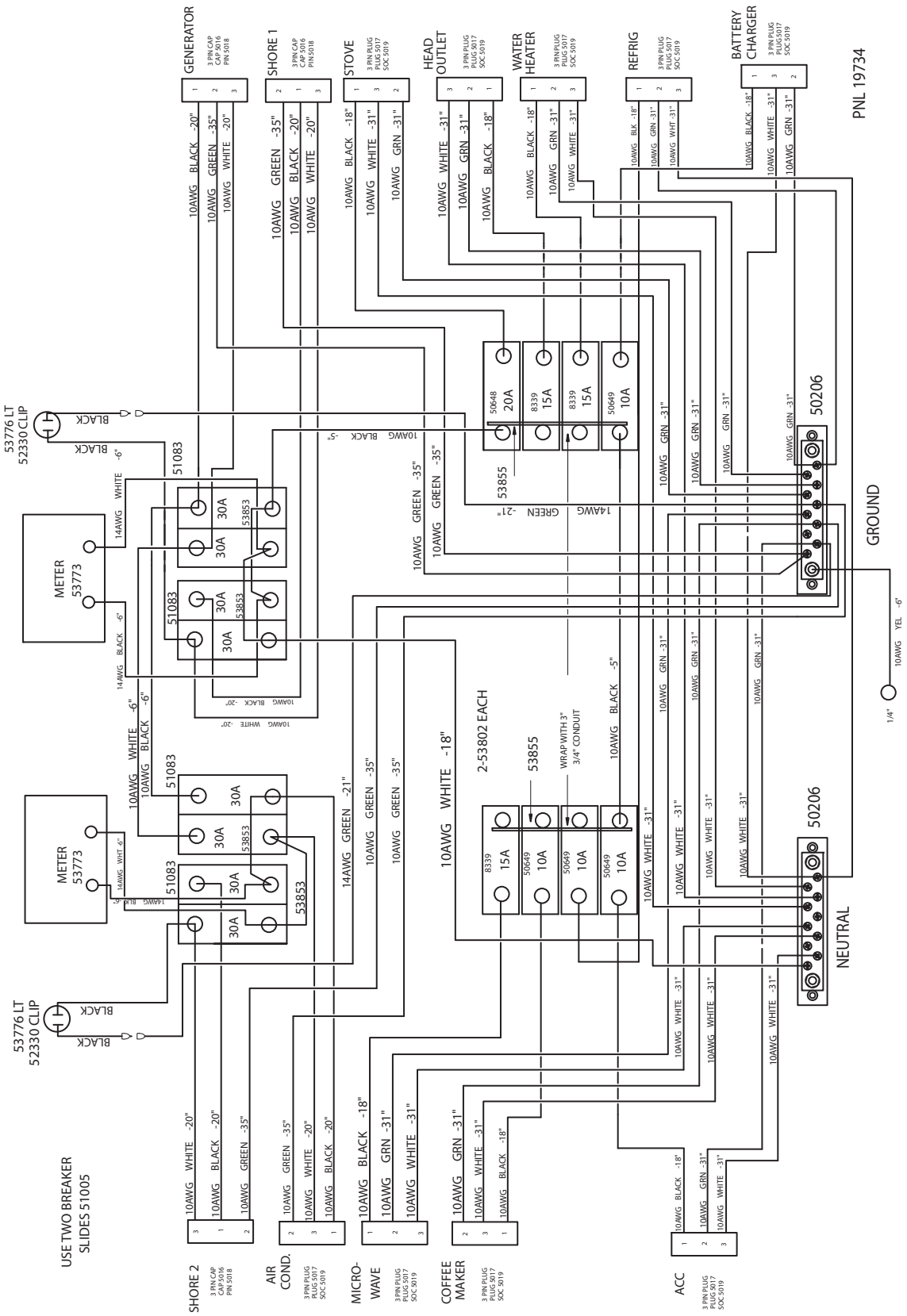

290 220V AC Panel

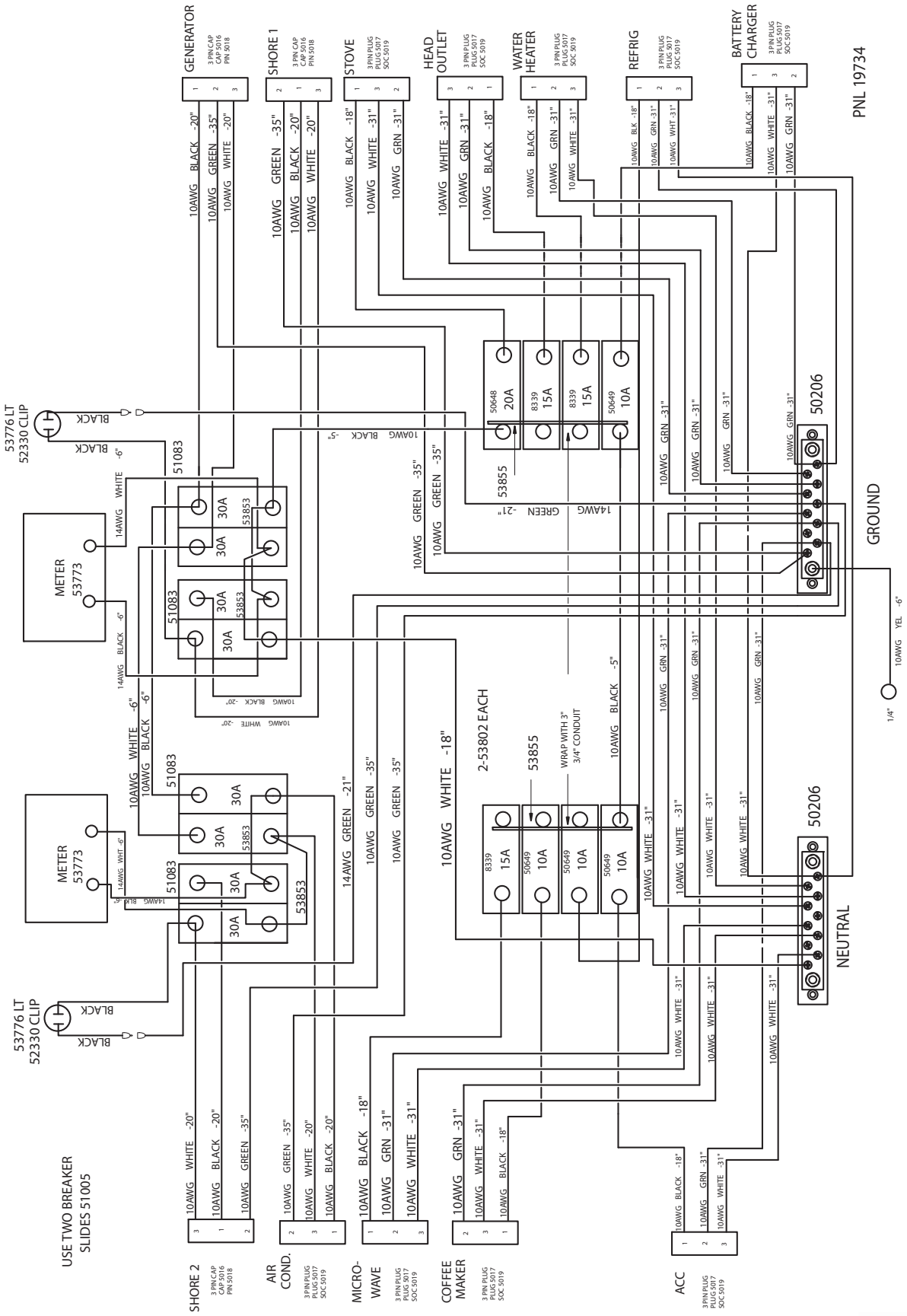

290 120V AC Harness

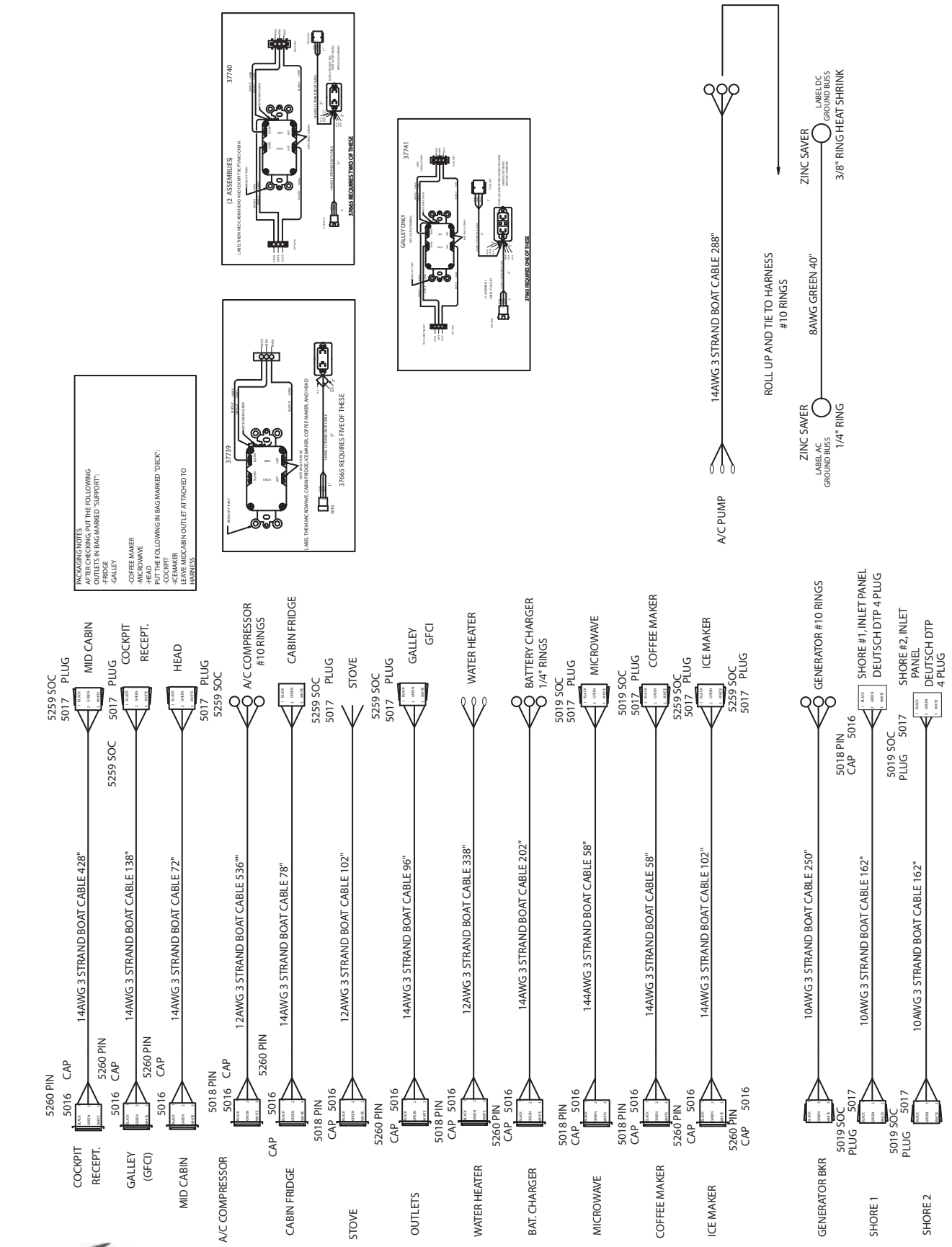

290 120V AC Harness

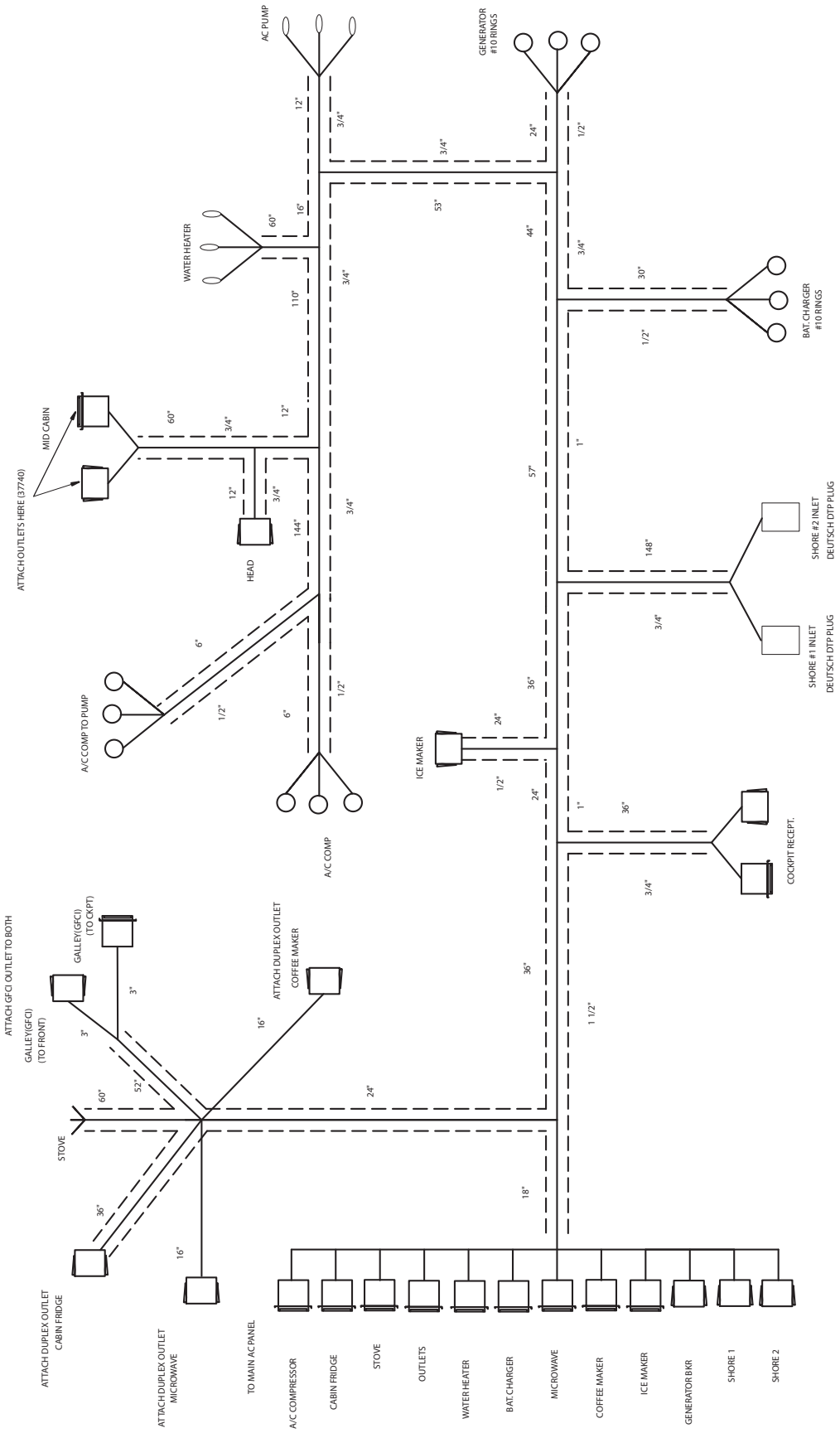

USE BLACK CONDUIT WITH BLUE STRIPE

290 Battery Switch Panel

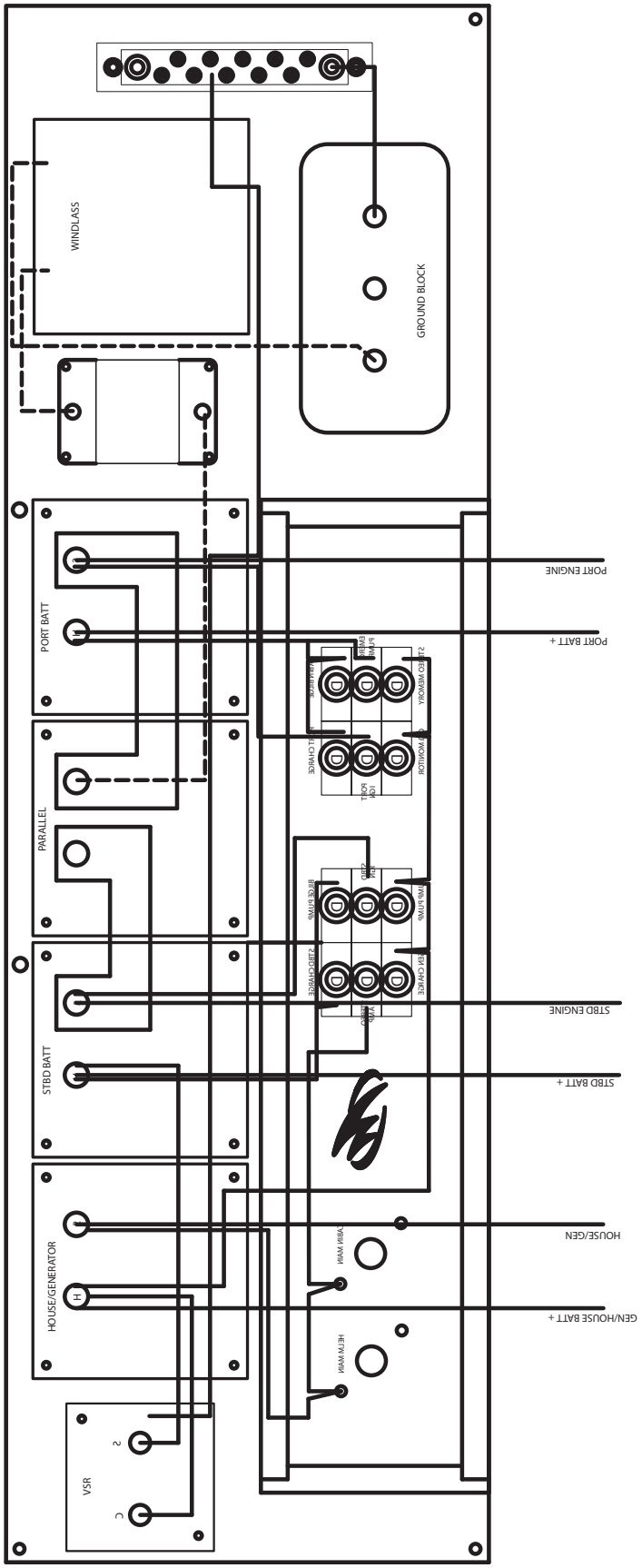

BACK VIEW

290 Engine Room Breaker Panel

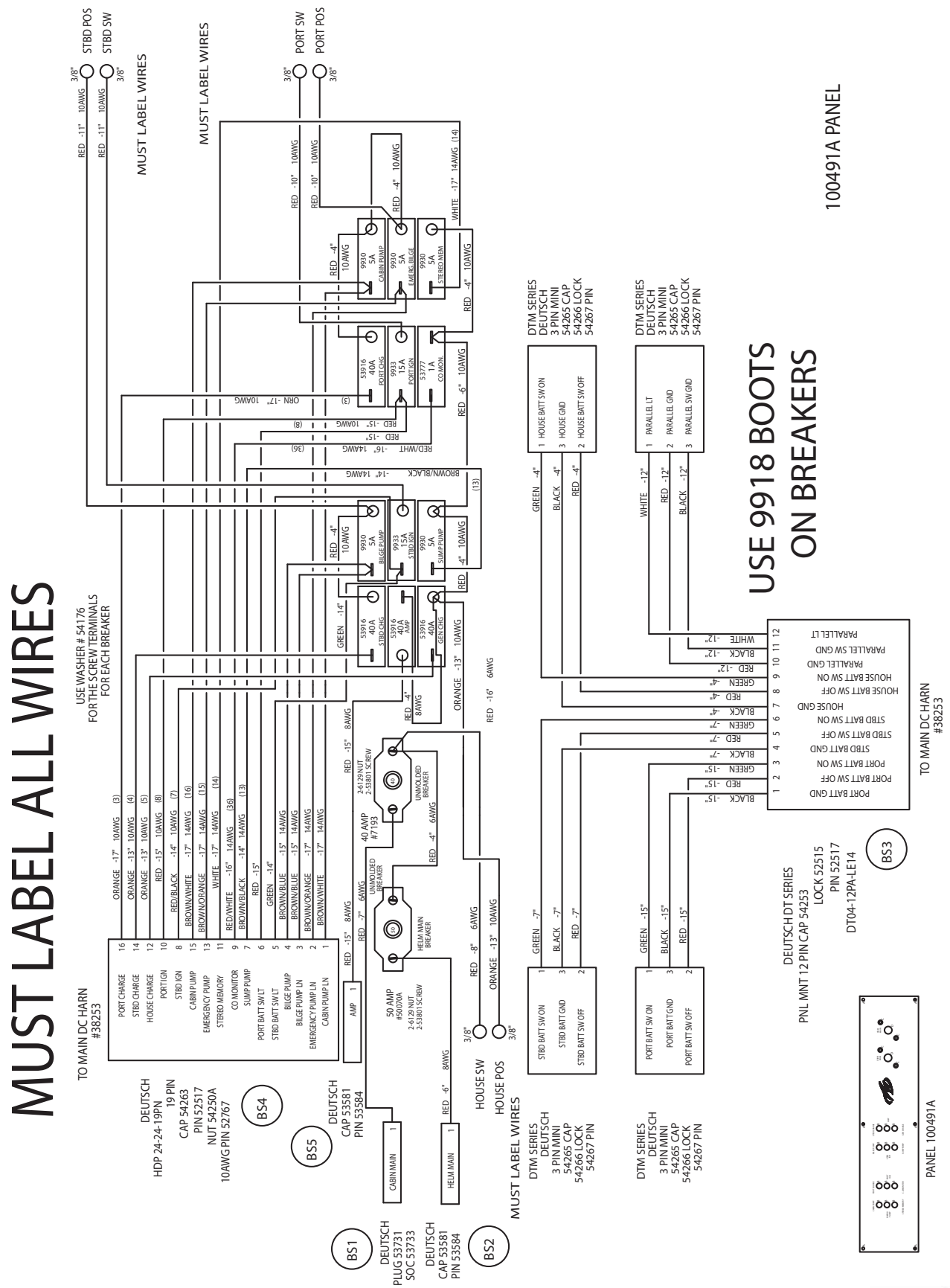

290 Gauge Panel

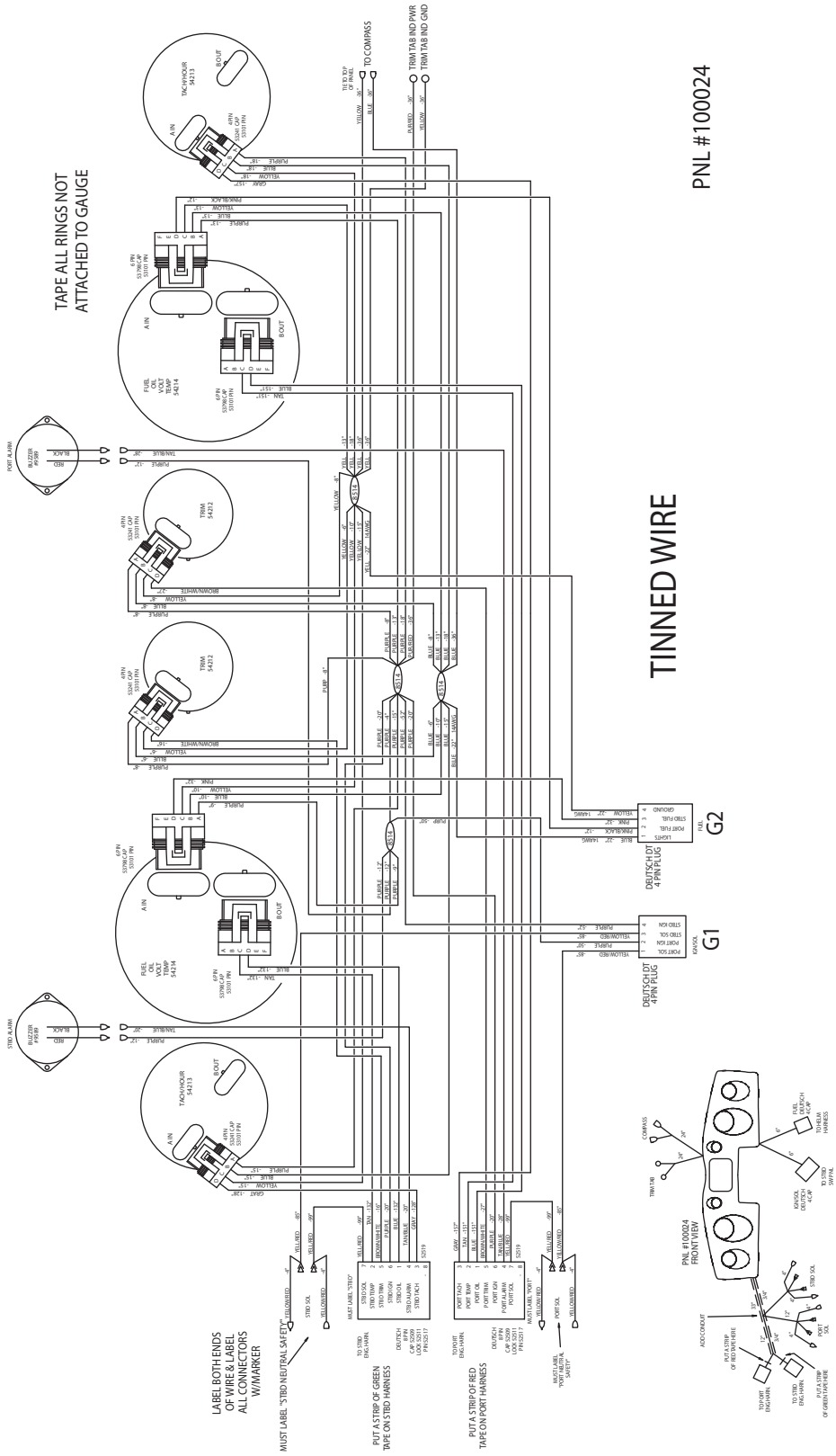

290 Port Switch Panel

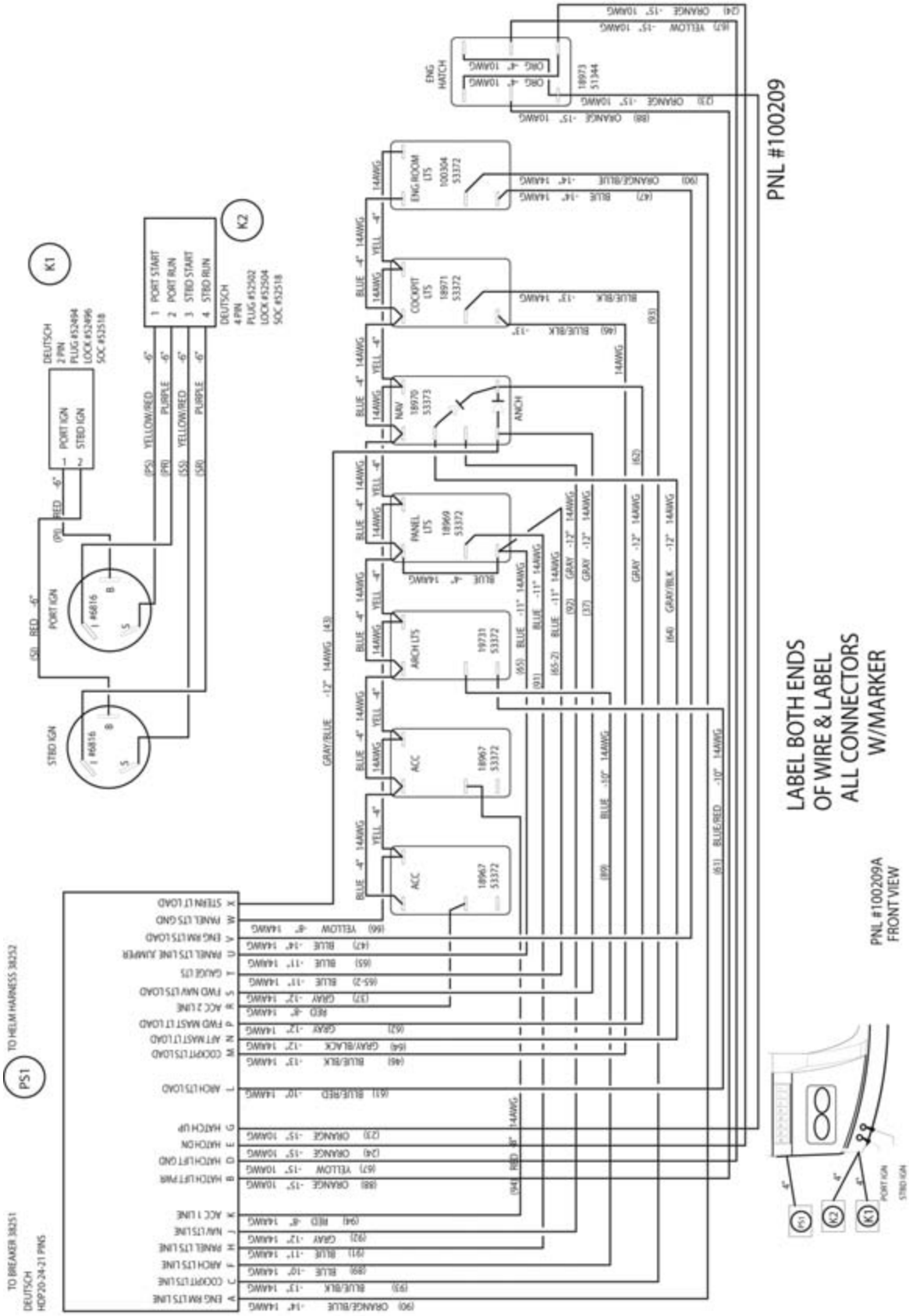

290 Starboard Switch Panel

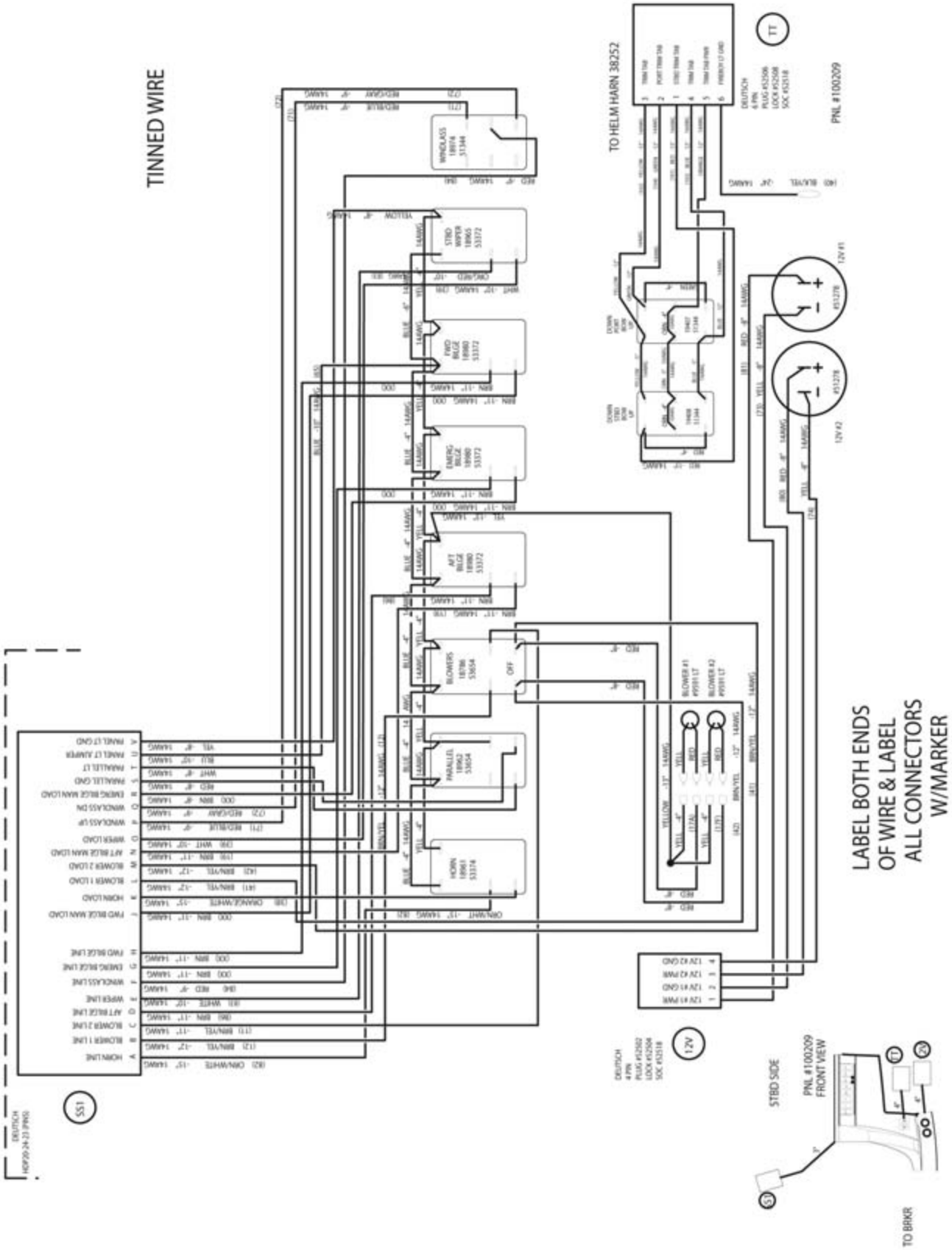

290 Breaker Panel

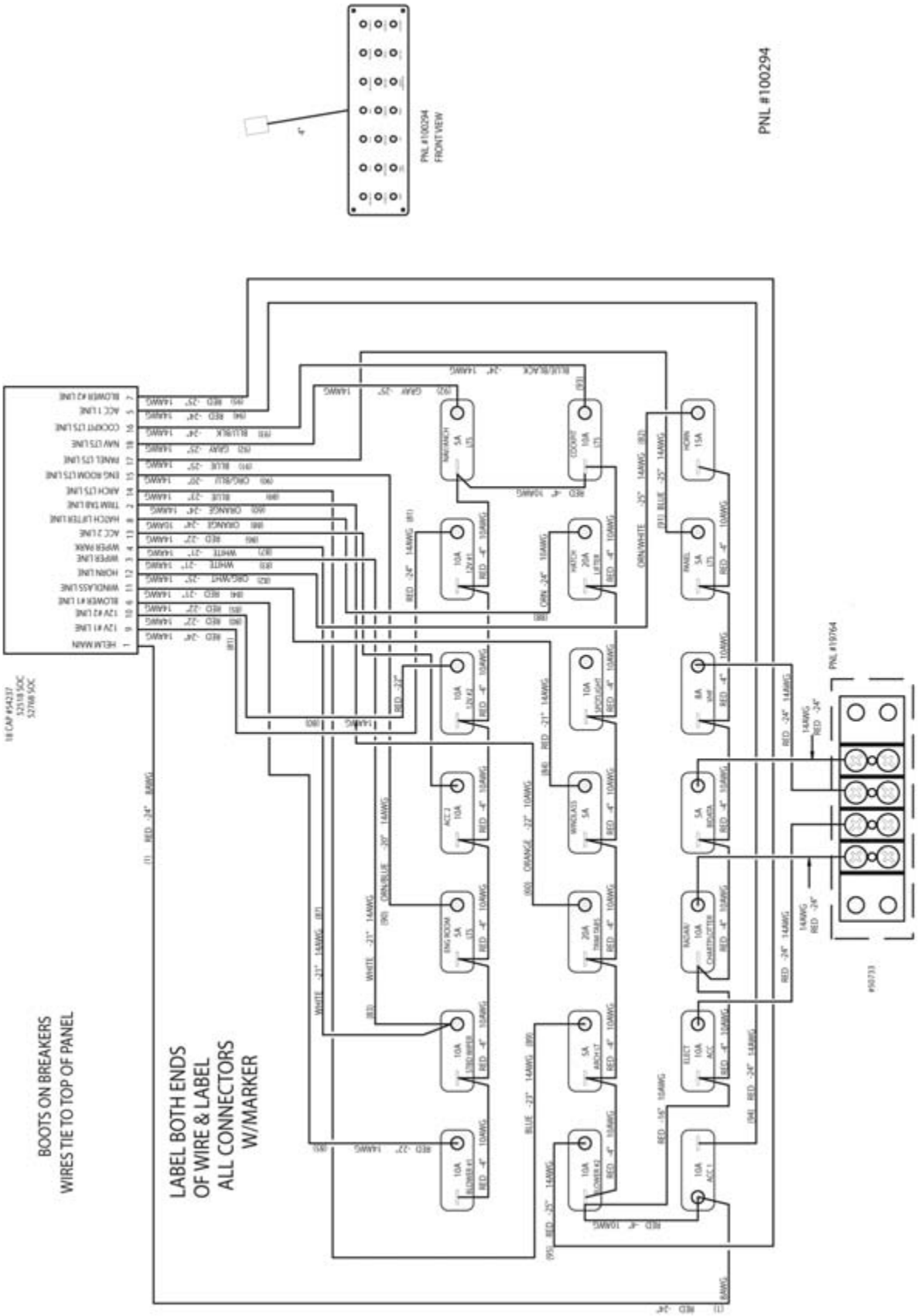

290 Helm Harness

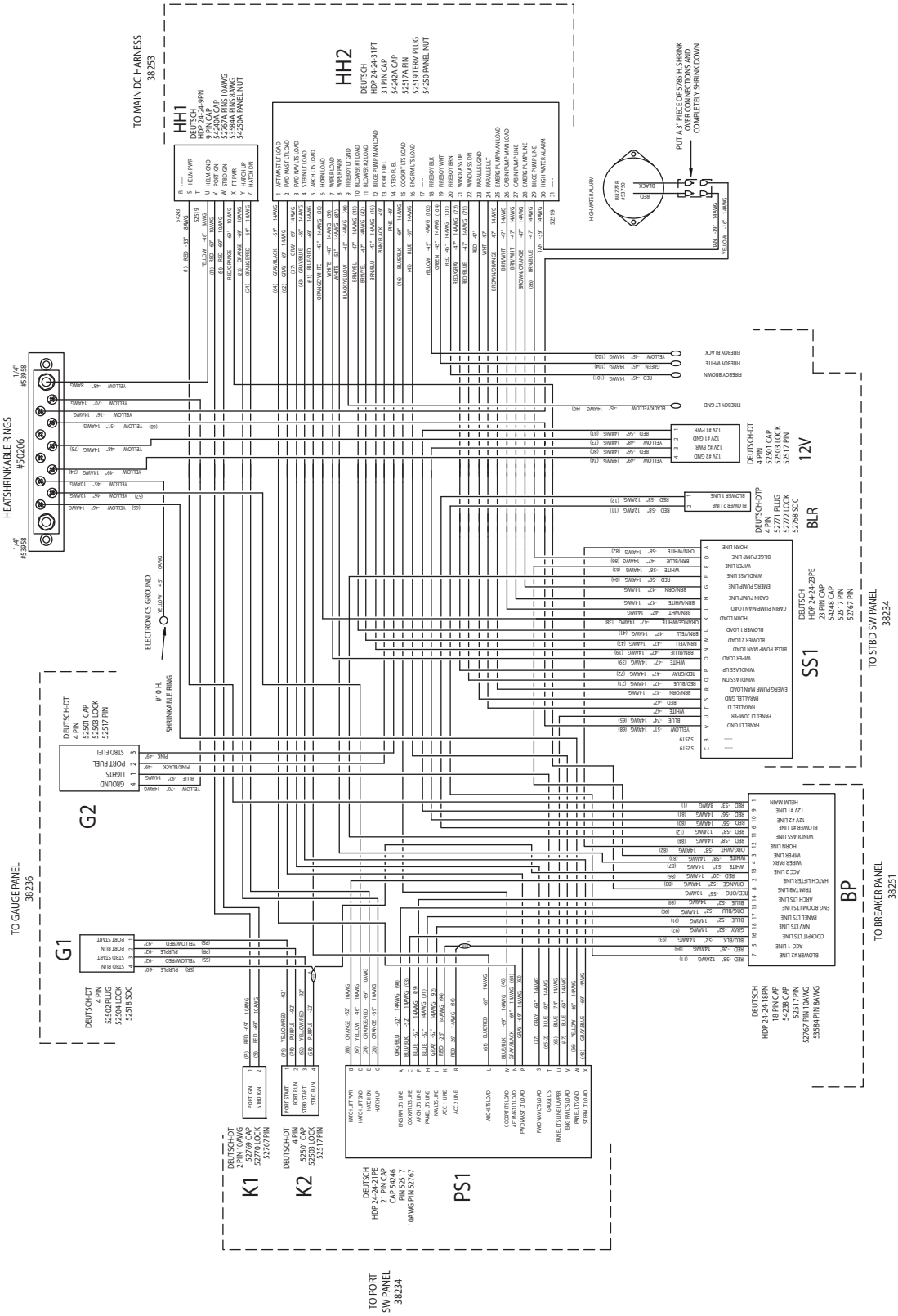

290 Main 12V DC Distribution Panel

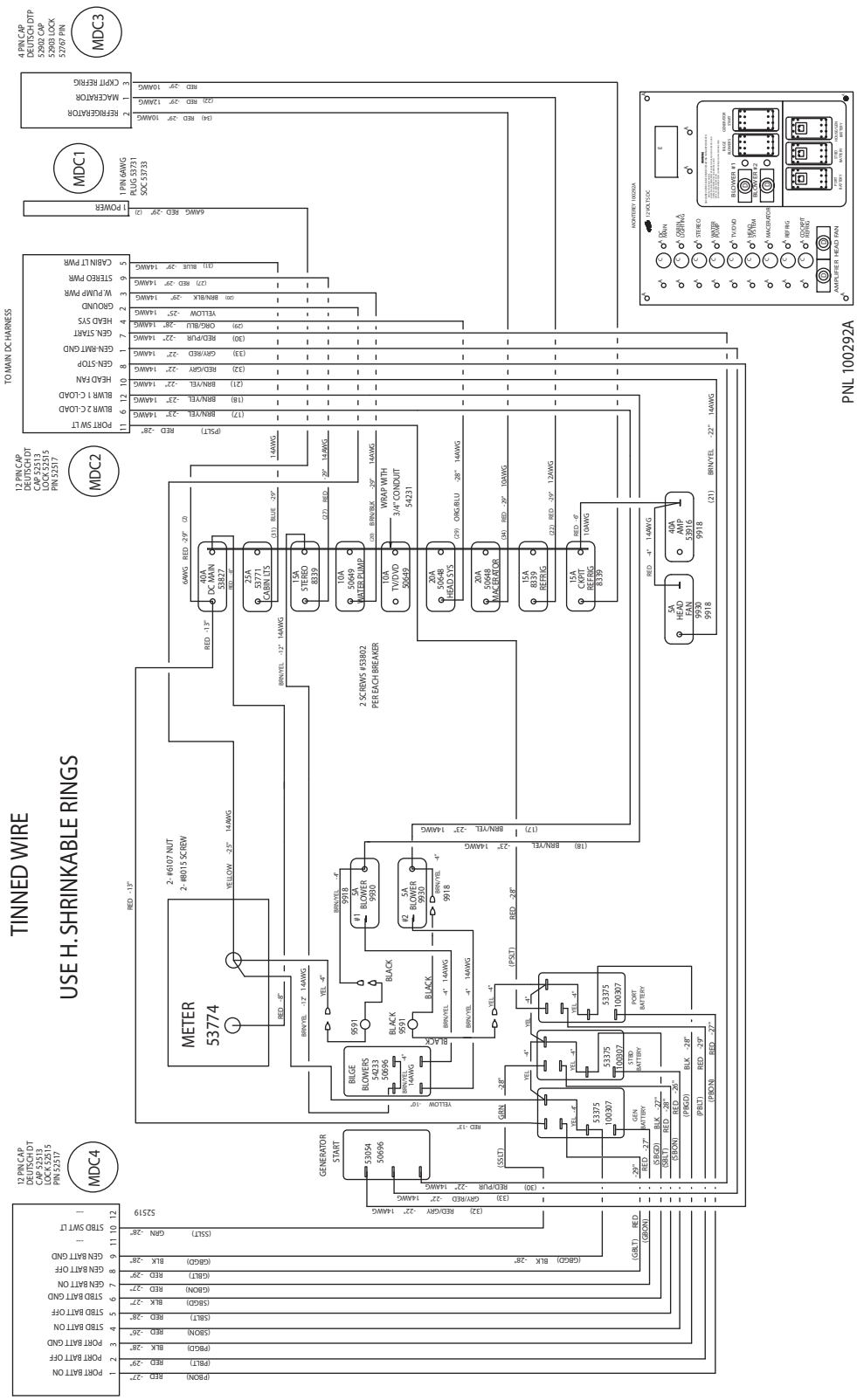

BOATING SAFETY

1

The popularity of boating and other water sports has undergone an explosion of growth in the past few years. Because of this, safety is an important issue for everyone who shares in the use of our waterways.

This section covers general boating safety information. Throughout this manual specific precautions and symbols identify safety related information.

The Safety Alert Symbol means ATTENTION! BECOME ALERT! YOUR SAFETY IS INVOLVED!

DANGER

Indicates the presence of a hazard which WILL cause SEVERE injury, death or substantial property damage.

WARNING

Indicates the presence of a hazard which CAN cause SEVERE injury, death or substantial property damage.

CAUTION

Indicates the presence of a hazard which WILL or CAN cause MINOR or MODERATE personal injury or property damage.

The precautions listed in this manual and on the boat are not all-inclusive. If a procedure, method, tool or part is not specifically recommended, you must satisfy yourself that it is safe for you and others, and that the boat will not be damaged or made unsafe as a result of your decision. REMEMBER – ALWAYS USE COMMON SENSE WHEN OPERATING!

BOATING REGULATIONS

The U.S. Coast Guard is the authority of the waterways; they are there to help the boating public. State boating regulations are enforced by local authorities. You are subject to marine traffic laws and “Rules of the Road” for both federal and state waterways; you must stop if signaled to do so by enforcement officers, and permit to be boarded if asked.

There are many pamphlets, prepared by the Coast Guard, available to you. These pamphlets explain “Rules of the Road”, signal lights, buoys, safety, international and inland regulations and much more than is presented in this manual. For more information contact your local U.S. Coast Guard Unit or call the Coast Guard Boating Safety Hotline at 1-800-368-5647.

BOAT SAFETY LABELS

Your boat is affixed with various safety labels at the time of manufacture. These labels appear at specific locations on the craft where safety is of particular concern. Safety labels must remain legible. If you suspect a label is missing or one becomes damaged, contact your dealer for immediate replacement.

BOATER RESPONSIBILITIES

Registration

The U.S. Coast Guard requires that all power boats operated on the navigable waters of the United States must be registered in the state of main use; also, many States require registration in that state whenever boating on waters within their state boundary. Always contact your state boating authorities (and neighboring states) for registration information on boats and trailers. Your dealer can supply you with the appropriate forms.

Education

This manual is not intended to provide complete training on all aspects of boat operation. We strongly recommend that all operators of this boat seek additional training on boat handling and safety. Some states require youths 16 years of age and younger to complete a boating safety course before operating any watercraft. Many others require operators under the age of 18 to be licensed in small boat operation.

The following is a listing of some of the agencies and organizations that offer safety training or information. To find boating safety courses in your area, call your state’s local boating agency or the Coast Guard boating safety Courseline at 1-800-336-2628 (1-800-245-2628 in Virginia).

- American Red Cross
- U.S. Coast Guard Auxiliary
- U.S. Power Squadrons
- State Boating Offices

Insurance

You must get insurance before operating your new boat. Loss by fire, theft or other causes, and liability protection against accidents is a must for responsible boaters. The boat owner is legally responsible for any damage or injury caused when he, or someone else operating the boat, is involved in an accident. Many states have laws detailing minimum insurance needs. Your insurance agent and your dealer can supply you with more information.

REQUIRED SAFETY EQUIPMENT

Your boat has been equipped at the factory with most federally required Class 1 [4.8 m (16 ft.) to less than 7.9 m (26 ft.)] safety equipment. **As the owner, it is your responsibility to obtain other mandatory safety equipment not provided by the boat manufacturer, and to ensure all equipment is kept in good, serviceable condition.**

MINIMUM REQUIRED SAFETY EQUIPMENT			
EQUIPMENT	**CLASS 1** 4.8 to less than 7.9 m (16 to less than 26 ft.)	**CLASS 2** 7.9 to less than 12.2 m (26 to less than 40 ft.)	**CLASS 3** 12.2 to not more than 19.8 m (40 to not more than 65 ft.)
PERSONAL FLOTATION DEVICES (PFDs)	One approved Type I, II, III or V (if used according to Coast Guard requirements) device aboard for each person on board or being towed on water skis, etc.; and, in addition, one throwable Type IV device.		
FIRE EXTINGUISHER (Must say Coast Guard Approved.)	At least one B-I type approved hand portable fire extinguisher (Not required on outboard motorboats less than 26 feet in length and not carrying passengers for hire if the construction of such motorboats will not permit entrapment of explosive or flammable gasses or vapors and if fuel tanks are not permanently installed.)	At least two B-I type approved portable fire extinguishers; OR at least one B-II type approved portable fire extinguisher.	At least three B-I type approved portable fire extinguishers; OR at least one B-I type **plus** one B-II type approved portable fire extinguisher.
DAY AND NIGHT VISUAL DISTRESS SIGNALS	Orange flag with black square-and-disk (day); and an S-O-S electric light (night); or three orange smoke signals, hand held or floating (day); or three red flares of hand held, meteor, or parachute type (day/night). Required only on coastal waters, the Great Lakes, territorial seas, and those waters connected directly to them, up to a point where a body of water is less than two miles wide.		
WHISTLE/HORN, BELL	Every vessel less than 12 meters (39.4 ft.) in length must carry an efficient sound producing device.	Every vessel 12 meters (39.4 ft.) but less than 20 meters (65.6 ft.) in length must carry a whistle or horn and a bell. The whistle or horn must be audible for 1/2 nautical mile. The mouth of the bell must be at least 200 mm (7.87 inches) in diameter.	

KC-0081.2

NOTICE

Many state equipment requirements go beyond Coast Guard requirements. Contact your state boating office for further information.

Equipment requirements for coastal and inland waters differ. Check with local authorities or the Coast Guard for further information about coastal water requirements.

Personal Floatation Devices

Federal law also requires at least one Type I, II, III or V Personal Floatation Device (PFD) for each person on board or being towed, and at least one Type IV throwable PFD in the boat.

PFDs are intended to help save lives. Therefore, you and your passengers should wear a PFD whenever boating. It is especially important that children and non-swimmers wear a PFD at all times. Make certain all passengers know how to put on and properly adjust their PFDs. Also, selecting the proper type PFD for your kind of outing helps ensure your time on the water can be the safest possible. There are four types of PFDs to wear and one type used for throwing in emergency situations.

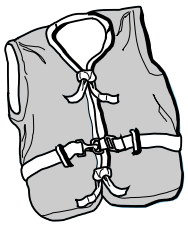

TYPE I
LIFE PRESERVERS
KC-0041

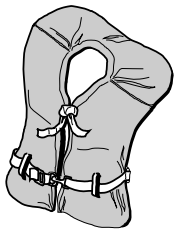

TYPE II
BUOYANT VESTS
KC-0051

TYPE III
FLOTATION AIDS
KC-0042

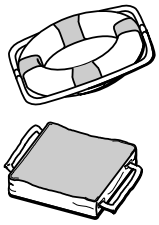

TYPE IV
THROWABLE DEVICES
KC-0071

TYPE V HYBRID PFD
MUST BE WORN
WHEN UNDERWAY
KC-0043

Type I: Most buoyant PFD and effective on all waters, especially open, rough water.

Type II: Good for calm water near shore on most inland waters where quick rescue is likely.

Type III: Good for most inland water applications where quick rescue is likely. Come in various styles and some are designed for watersport activities.

Type IV: Intended for heavy traffic inland waters where help is always available. Designed to be thrown to a person in the water and should never be worn.

Type V: Inflatable design for special use activities and may be used instead of a Type I, II, or III PFD if used in accordance with the approval conditions on the label *and if worn when the boat is underway*. Some Type V PFDs provide increased protection against hypothermia.

NOTICE

- **If a Type V PFD is to be counted toward the minimum carriage requirements, it must be worn.**
- **Special PFDs are available for skiing and other watersports. These PFDs are constructed with materials suitable for high impact falls.**

Keep the following PFD points in mind:

- Set an example and wear your PFD. Require your passengers to wear them also.
- Make sure the PFD fits properly; this is especially important for children and non-swimmers.
- At the beginning of each season, check PFDs for damage and test for proper flotation.

Fire Extinguisher

U.S. Coast Guard approved fire extinguishers are generally required on all Class I-III boats. Extinguishers should be mounted in readily accessible areas away from the engine compartment and alcohol stove (if equipped). All passengers should know the location and operating procedure of each extinguisher.

Any marine fire extinguisher must be classified to extinguish type B fires (gasoline, oil, or grease).
The size and number of required fire extinguishers depend on the size of your boat. Check pressure gauge regularly for proper pressure; have extinguisher filled if necessary.

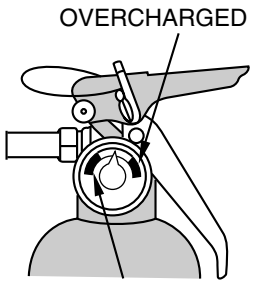

KC-0083

Visual Distress Signals

Federal law also requires boats 4.8 m (16 ft.) and longer to carry day and night visual distress signals when operating on coastal waters, the Great Lakes, territorial seas or those waters directly connected to them, up to a point where the body of water is less than two miles wide. Carry several types of signaling devices to handle a variety of conditions.

KC-0082

WARNING

Pyrotechnic signaling devices can cause injury and property damage if not handled properly. Follow manufacturer's directions. Stow devices so they are inaccessible to children.

NOTICE

- **Some pyrotechnics are restricted from use on certain bodies of water, so always check with local authorities.**
- **All signaling devices must be in serviceable condition, readily accessible, and in compliance with Coast Guard requirements.**

Recommended Equipment

As a precaution, a good boater will avoid potential problems on an outing by having additional equipment on board. Normally, this equipment is dependent on the body of water and the length of the trip; your dealer can assist you:

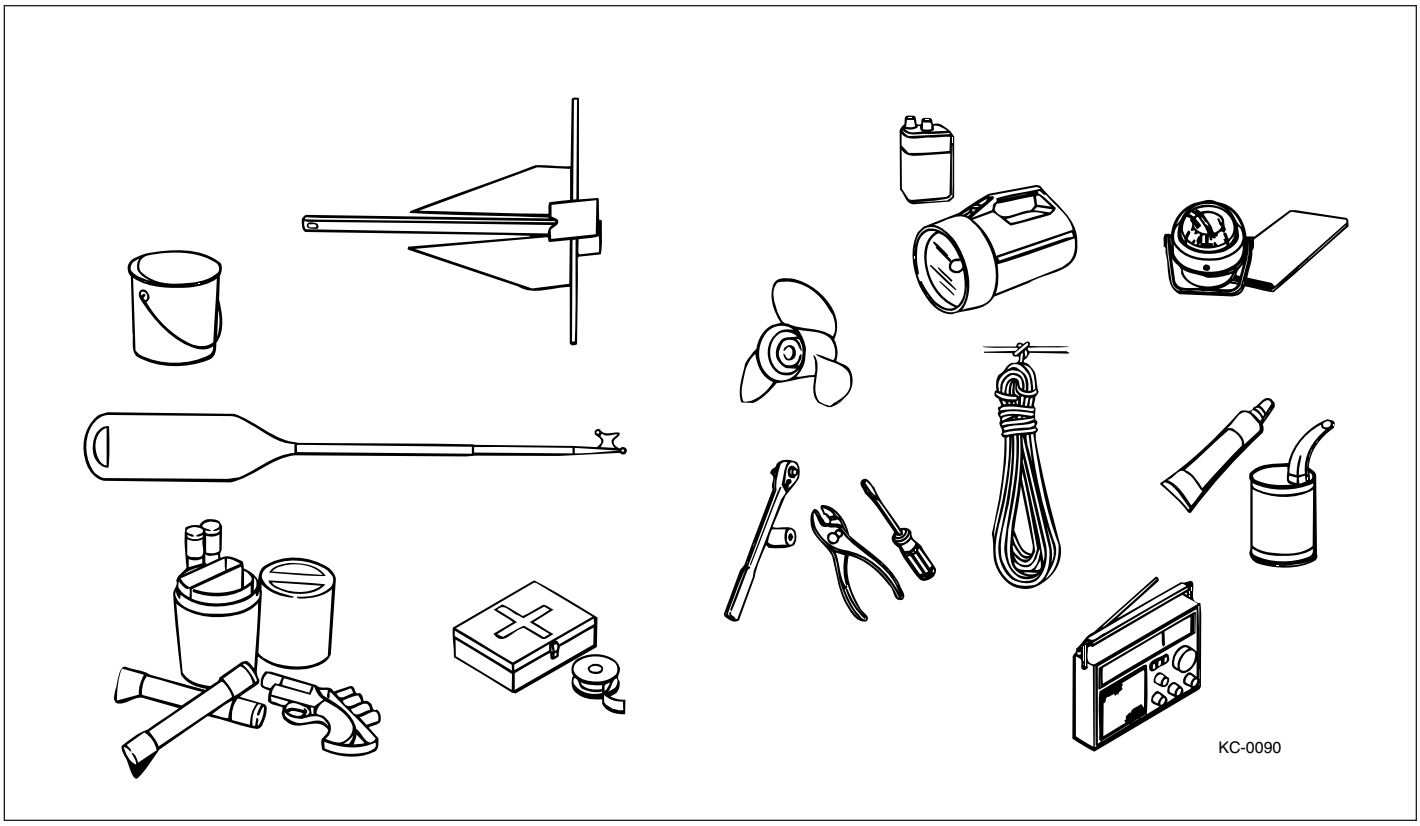

- First aid kit and manual
- Anchor with sufficient line
- Mooring lines and fenders
- Bailing device (bucket, hand pump, etc.)
- Combination oar/boat hook
- Day/night visual distress signal
- Lubricant
- Tool kit
- Spare propeller, nut and washer
- Spare fuses and bulbs
- Local charts, compass and GPS
- Waterproof flashlight
- Portable AM/FM radio with weather alert
- Spare flashlight and radio batteries
- Sunglasses and sun block
- Tow line
- Cellular Phone
- Emergency Position Indicating Radio Beacon (EPIRB)
- Spare keys
- Binoculars
- Spare Fuel
- Food and water provisions (extended cruise)
- Auxiliary starting battery

EMERGENCIES

Be prepared to deal with emergencies before they happen. Try to formulate a plan for each type in advance so that decisions can be made quickly and without hesitation. Precious moments lost can mean the difference between losing and saving a life.

Reporting Accidents

The U.S. Coast Guard requires the owner or operator of a boat involved in an accident to report the incident to the proper marine law enforcement agency for the State in which the accident occurred. Immediate notification to the nearest State boating authority is required if a person dies or disappears as a result of a recreational boating accident. If a person dies or injuries requiring more than first aid are involved, a formal report must be filed within 48 hours of the accident. A formal report must be filed within 10 days for accidents exceeding $500 in property damage or complete loss of boat.

Giving Assistance

If you see a distress signal or suspect a boat is in trouble, you must assume it is a real emergency and render assistance immediately. By law, the operator in charge of the craft is obligated to provide assistance to any individual in danger if such assistance can be provided safely. Failure to render assistance can result in a fine and/or imprisonment.

The 1971 Boating Safety Act grants protection to a “Good Samaritan” boater providing good faith assistance, and absolves a boater from any civil liability arising from such assistance.

Fires

Most fires are the result of gasoline and oil accumulating in the bilge from careless fueling practices. Use the fire extinguisher at the base of the flames using a sweeping motion. Prudent and accurate use of the available chemicals should contain all but the worst fires. Verify that the fire has been extinguished. If so, check damage and get assistance immediately. If not, get out and swim at least 23 meters (25 yards) upwind from the boat and use the visual distress signals to get assistance.

On board fires involving the fuel system usually result in either an explosion that completely destroys the boat, or the boat burning to the waterline and self extinguishing. Deciding on abandoning the boat or staying to fight the fire is difficult and depends on many factors. Try to formulate a fire plan in advance to make that decision quickly and without hesitation.

Capsizing/Swamping

A boat may capsize or swamp when least expected. Like fires, try to formulate a plan in advance on what to do if it should happen. Keep in mind the following guidelines:

- Try to turn the engine OFF to prevent damage.
- If others were on board, try to locate them, make sure they’re conscious and that they can swim.
- **Stay with the boat, it will float!** Climb up on the hull and try to get assistance.
- Don’t try to swim to shore. It’s usually further than it looks.

KC-0164

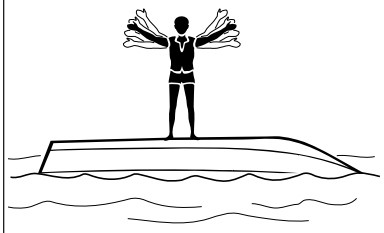

KC-0170

DAYTIME WARNING	NIGHTIME WARNING
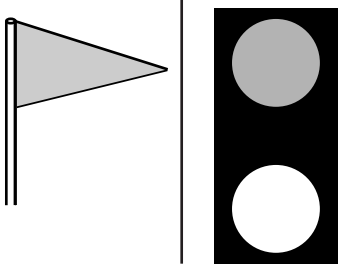	
Small Craft Advisory - Winds greater than 18 knots, sustained for two hours or more or hazardous wave conditions. Following a storm, hazardous wave conditions can persist long after the high winds have subsided.	
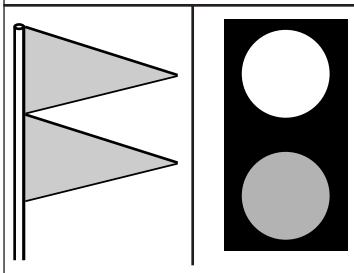	
Gale Warning - Sustained winds (2 or more hours), of 34-47 knots.	
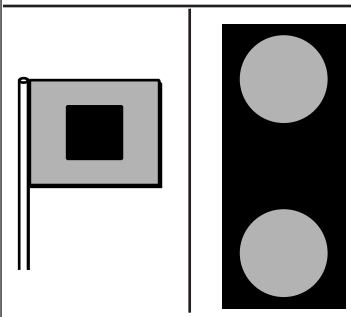	
Storm Warning - Sustained winds of 48 knots or greater.	
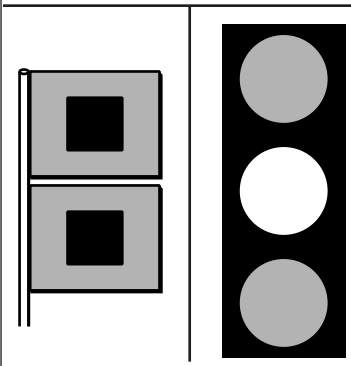	
Hurricane Warning - Forecast winds of 64 knots and above. Displayed only in connection with a hurricane. KC-0371	

Actual Signal in red

HAZARDOUS CONDITIONS

Every waterway poses hazards that you should avoid; shallow water, tree stumps, sand bars, etc. Ask local boaters for information and consult a marine chart when boating on unfamiliar waters. As the operator of the boat, you should try to avoid all hazards, known and unknown. The following information does not contain all possible water hazards.

Weather

Getting caught in severe weather is hazardous. Check with local weather stations, the U.S. Coast Guard, or Weather service broadcasts (162.55 or 162.40 Megahertz) for the latest conditions. It is recommended to check the weather not only before but periodically while you are boating.

Storms – Take common sense precautions if you are forced to operate your boat in stormy conditions:

- Wear PFDs
- Stow gear below and lash equipment on deck.
- Reduce speed and head for place of refuge you can reach most easily.
- If you lose power, keep boat headed into the waves by rigging a sea anchor off the bow.

Fog – It is best to avoid operating your boat in foggy weather. When fog sets in take bearings and log courses and speeds. You are required to emit a five second blast from your horn or whistle once every minute. Additionally, have passengers wear PFDs and observe for oncoming vessels.

Dam Spillways

The water around a dam spillway is a hazardous area. It is subject to rapid changes. Boaters must keep clear of the spillway areas below dams.

Shallow Water Operation

Operating in shallow water presents a number of hazards. If the engine strikes an underwater hazard, check for boat and engine damage. If the engine vibrates excessively after striking an underwater obstruction, it may indicate a damaged propeller.

Sand bars in narrow inlets are constantly shifting, making it difficult to mark them with buoys. Sometimes, sand bars are indicated by waves as they form into breakers when passing over the sand bar. If you ground the boat on a sand bar, seek help from another boater or radio for help.

In coastal areas, tides can affect water level as much as 9 m (30 ft.) Check with local marinas or Coast Guard stations for tide tables and current charts.

Warning Markers

It is a good idea to ask local authorities if there are hazardous areas and how they are marked. Boaters must also recognize the flag designs which indicate that skin divers are present and keep well clear of the area.

Watch for swimmers. Swimming areas may not be marked. Steer clear from the area and always remain alert.

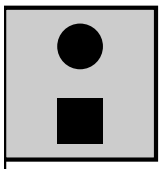

DISTRESS

KC-0942

Distress flags indicate a fellow boater is in need of assistance.

Navigation markers serve as a means of identifying navigable routes, and indicate water hazards. Boaters should become familiar with navigation markers and stay within marked boundaries and clear of hazards.

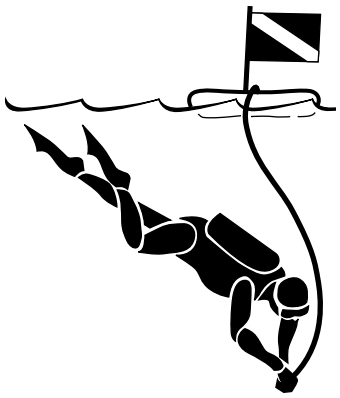

DIVERS FLAG

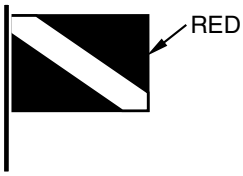

USED BY RECREATIONAL DIVERS - INDICATES DIVER'S POSITION

ALPHA FLAG

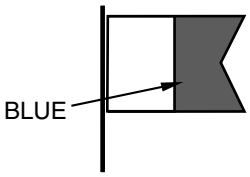

WORLDWIDE VESSELS ENGAGED IN DIVING OPERATIONS - DOES NOT INDICATE DIVER'S POSITION

KC-0372

KC-0260

BOATING UNDER THE INFLUENCE

⚠ WARNING ⚠

Federal and state laws prohibit operating a boat under the influence of alcohol and other drugs. These regulations are actively enforced. Impaired operation may result in severe personal injury or death.

KC-0153

Boating, alcohol and the use of other drugs just doesn't mix. These substances reduce your reaction time and affect your better judgment. Combined with the sun, wind, waves, and noise of other watercraft, the effects of drugs are increased and will significantly reduce your reaction time. As the owner/operator, you are responsible for the alcohol/drug use and on-board behavior of your passengers.

NOTICE

If the operator's blood alcohol content is 0.10% (0.08% in some states) or above, violators are subject to a civil penalty up to $1,000 or criminal penalty up to $5,000, one year imprisonment or both. Operating a boat under the influence can also result in a loss of motor vehicle driving privileges.

CARBON MONOXIDE

Carbon Monoxide (CO) is a colorless and odorless gas produced by all engines and fuel burning appliances. Even with the best boat design and construction, plus the utmost care in inspection, operation, and maintenance, hazardous levels of CO may still be present in accommodation spaces under certain conditions. To reduce CO accumulation, always ventilate the boat interior by opening the deck hatches, windows or canvas to provide adequate ventilation.

⚠ DANGER ⚠

EXTREME HAZARD – Carbon monoxide gas (CO) is colorless, odorless and extremely dangerous. All engines and fuel burning appliances produce CO as exhaust. Direct and prolonged exposure to CO will cause BRAIN DAMAGE or DEATH. Signs of exposure to CO include nausea, dizziness and drowsiness. Sources of CO include:

1. **Blockage of boat exhausts by obstruction.**

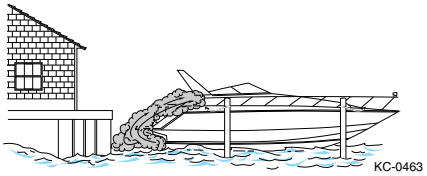

Exhausts traveling along obstruction.

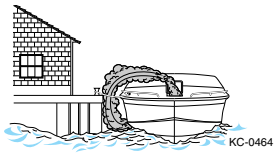

3. **Operating at slow speed or while dead in the water.**

4. **Operating with high bow angle.**

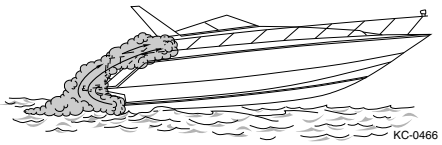

5. **Exhausts from other vessels in confined areas.**

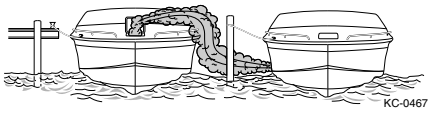

6. **Operating with canvas tops and side curtains in place without ventilation.**

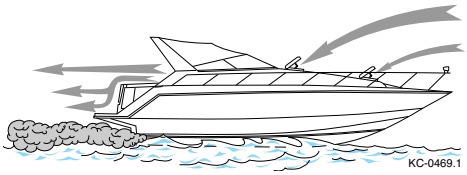

ENSURE ADEQUATE VENTILATION FOR CORRECT AIR MOVEMENT THROUGH BOAT!

OPERATION BY MINORS

Minors must always be supervised by an adult whenever operating a boat. Many states have laws regarding the minimum age and licensing requirements of minors. Be sure to contact the state boating authorities for information.

PASSENGER SAFETY

Whenever you are going for an outing, make sure that at least one passenger is familiar with the operation and safety aspects of the boat in case of emergency. Show all passengers the location of emergency equipment and explain how to use it. Don't allow passengers to drag their feet or hands in the water, or sit on the bow, bow pulpit, deck, or gunwale while the engine is running.

WATER SPORTS

Larger boats produce a wake too big for skiers. Only boats that are equipped with a ski-tow eye should be used to pull water skiers.

NOTICE

It is unlawful to participate in water sports while under the influence of alcohol or other drugs.

When participating in water sports, be safe and courteous and follow these guidelines:

- Be considerate to fishermen and others you share the water with.
- Do not perform water sports in congested areas.
- Stay away from navigation markers.
- Stay away from other boats and water sports participants.
- Return immediately to a fallen water sport participant.
- Regularly inspect water sport equipment to ensure it is safe.

⚠ WARNING ⚠

- **Water sport participants must wear a USCG approved flotation device. A type III water ski vest is an approved and practical PFD.**
- **Keep at least 30 m (100 ft.) away from all other objects.**
- **When water sporting have an experienced driver and aft facing observer in the boat.**
- **Never water sport in shallow water or at night.**
- **Never jump from a moving boat.**
- **Always keep a downed water sporter in sight.**
- **Turn the motor OFF before you get close to someone in the water.**

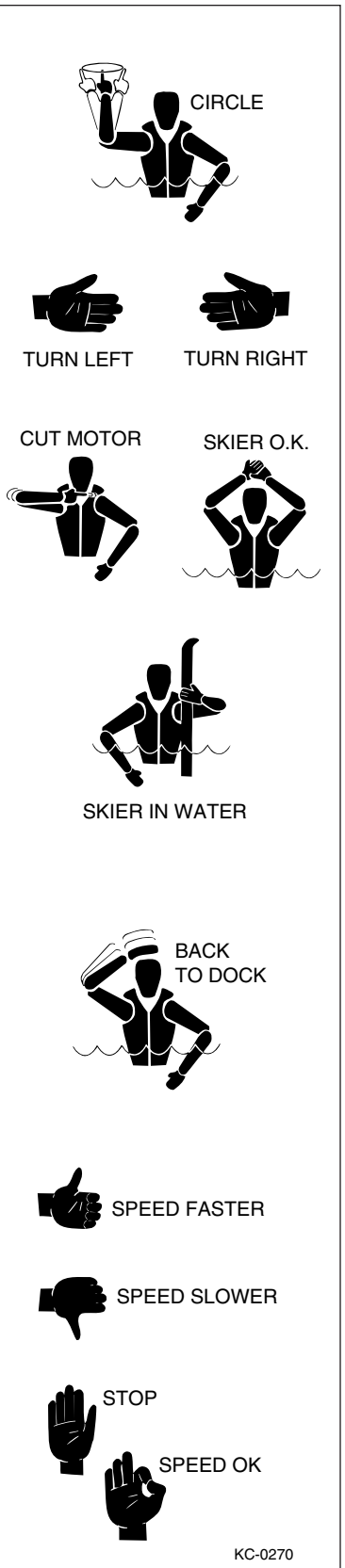

WATER SPORT
HAND SIGNALS

GENERAL PRECAUTIONS

Your safety, the safety of your passengers, and other boaters are among your responsibilities as operator of this boat. Your boat must be in compliance with U.S. Coast Guard safety equipment regulations. You should know how to react correctly to adverse weather conditions, have good navigation skills, and follow the “rules of the road” as defined by the Coast Guard and state/county/local regulations.

⚠ WARNING ⚠

Read and understand this manual and the engine manual, and be sure that you understand all controls and operating instructions before attempting to operate the boat. Improper operation can be extremely hazardous.

Before each outing you should check all safety equipment, such as fire extinguishers, PFDs, flares, distress flags, flashlights, engine stop switch, etc. They should be operable, in good condition, readily visible, and easily accessed.

Tell someone of your travel plans. Check local weather reports before casting off; do not leave the dock area when strong winds and electrical storms are in the area or predicted to be in the area.

Know the weight capacity of your boat. Do not overload your boat.

OUR ENVIRONMENT

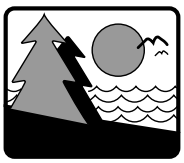

As a boater, you already appreciate nature’s beauty and the peace of the great outdoors. It is a boater’s responsibility to protect the natural environment by keeping waterways clean.

Don’t put anything in the water you wouldn’t want to eat or drink!

Conserve Fishery Resources

There is a tremendous drain on our fishery resources. Over-fishing and pollution have strained the fish population. Do your part by keeping only what you will eat by practicing catch-and-release.

Foreign Species

If you trailer your boat from lake to lake, you may unknowingly introduce a foreign aquatic species from one lake to the next. Thoroughly clean the boat below the water line, remove all weeds and algae, and drain the bilge and livewells before launching the boat in a new body of water.

Fuel and Oil Spillage

The spilling of fuel or oil into our waterways contaminates the environment and is dangerous to wildlife. Never discharge or dispose fuel or oil into the water; it is prohibited and you could be fined. There are two common, accidental types of discharge:

- Overfilling the fuel tank
- Pumping contaminated bilge water

WARNING

Fumes from rags can collect in bilge and be extremely hazardous. Never store rags used to wipe-up fuel or solvent spills in the boat. Dispose of rags properly ashore.

Discharge and Disposal of Waste

Waste means all forms of garbage, plastics, recyclables, food, wood, detergents, sewerage and even fish parts in certain waters - in short, nearly everything. We recommend you bring back everything you take out with you for proper disposal ashore.

If you have a marine sanitation device (head or marine toilet) installed, use an approved pump-out facility at your marina. Many areas prohibit the discharge of sewerage overboard or even an operable overboard waste discharge.

Excessive Noise

Noise means engine noise, radio noise or even yelling. Many bodies of water have adopted noise limits. Don't use thru-transom exhaust unless you're well off shore. Music and loud conversation can carry a considerable distance on water, especially at night.

Wake and Wash

Be alert for NO WAKE zones. You may be responsible for any damage or injury caused by your wake/wash. Prior to entering a NO WAKE zone, come off plane to the slowest steerable speed.

Exhaust Emissions

Increased exhaust (hydrocarbon) emissions pollute our water and air. Keep your engine tuned and boat hull clean for peak performance. Consult your dealer and engine manual for information.

Paints

If your boat is kept in water where marine growth is a problem, the use of anti-fouling paint may reduce the growth rate. Be aware of environmental regulations that may govern your paint choice. Contact your local boating authorities for information.

Cleaning Agents

Household cleaners should be used sparingly and not discharged into waterways. Never mix cleaners and be sure to use plenty of ventilation in enclosed areas. DO NOT use products which contain phosphates, chlorine, solvents, non-biodegradable or petroleum based products. Citrus based cleaners are excellent for marine cleaning purposes and are safe for you and the environment. Refer to MAINTENANCE for more information.

BASIC RULES OF THE ROAD

2

⚠ WARNING ⚠

The nautical rules of the road must be followed to prevent collisions between vessels. Like traffic laws for automobiles, the operator is legally required to follow safe operating rules.

The following information outlines only the most basic of the nautical rules of the road. For more information, contact your local U.S. Coast Guard Auxiliary.

AIDS TO NAVIGATION

Learn to recognize the different buoys and day markers; they are the sign posts of the waterways. The United States Aids to Navigation System (USATONS) is the primary marking system used on inland water, coastal waters and rivers. This system is maintained by the U.S. Coast Guard (USCG).

Types of Buoys

There are several types and shapes of buoys. Buoys may be unlighted lighted, with sound or may have both an audible and a visual signal. Lights, bells and horns are used on buoys for night or poor visibility conditions. Different shapes of buoys are shown on the right.

Buoys with unique light flashing characteristics are identified on nautical charts with the specific flashing pattern.

Mooring Buoys

The only buoys you are permitted to moor to are mooring buoys. Mooring buoys are white with a blue horizontal stripe. Mooring to a navigation buoy, regulatory markers or lateral markers is illegal.

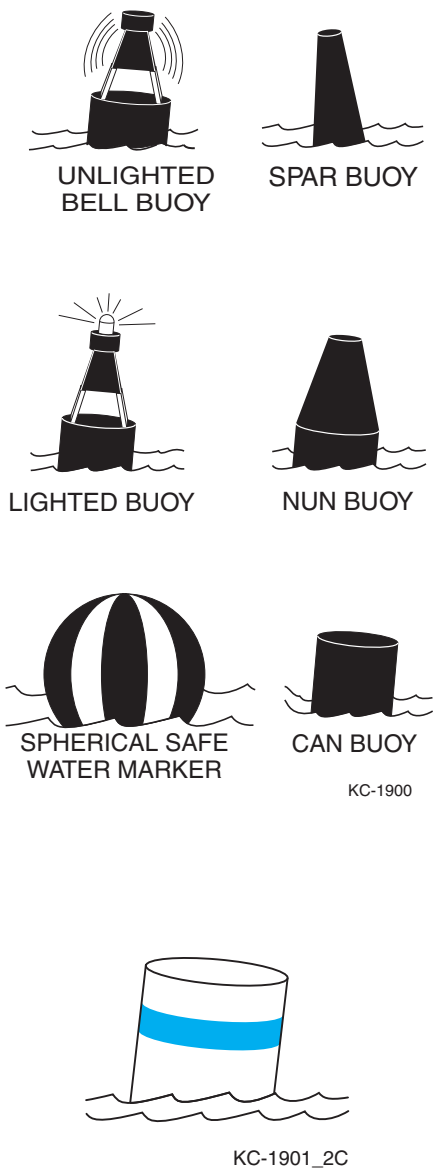

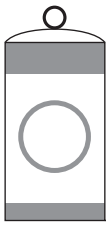

CONTROLLED AREA

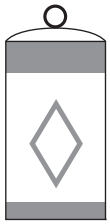

DANGER

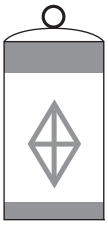

BOATS KEEP OUT

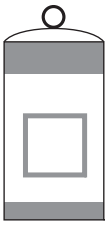

INFORMATION

= ORANGE

KC-1903_bw

Regulatory Markers

Regulatory markers indicate dangerous or restricted controlled areas. These markers are used to indicate speed zones, areas set aside for particular use, general information and directions. Regulatory markers are white with orange geometric shapes and also have orange bands near the top and at the water line of the buoy. You must obey regulatory markers.

Lateral Markers

Lateral markers are oriented from the perspective of being entered from seaward (the boater is going toward the port). This means that red buoys are passed on the starboard (right) side of the vessel when proceeding from open water into port, and green buoys to the port (left) side.

The right side (starboard) of the channel is marked with RED, evennumbered buoys. The left side (port) of the channel is marked with GREEN, odd-numbered buoys.

Day markers are colored and numbered the same as buoys. RED, triangular day markers with even numbers mark the starboard side of the channel. GREEN, square day markers with odd numbers mark the port side of the channel.

Fairways and mid-channels may be marked with safe water marks or buoys. These marks indicate safe water all around. Safe water marks are red and white striped and are round or have a red spherical topmark. Angular day markers with even numbers mark the starboard side of the channel. GREEN, square day markers with odd numbers mark the port side of the channel.

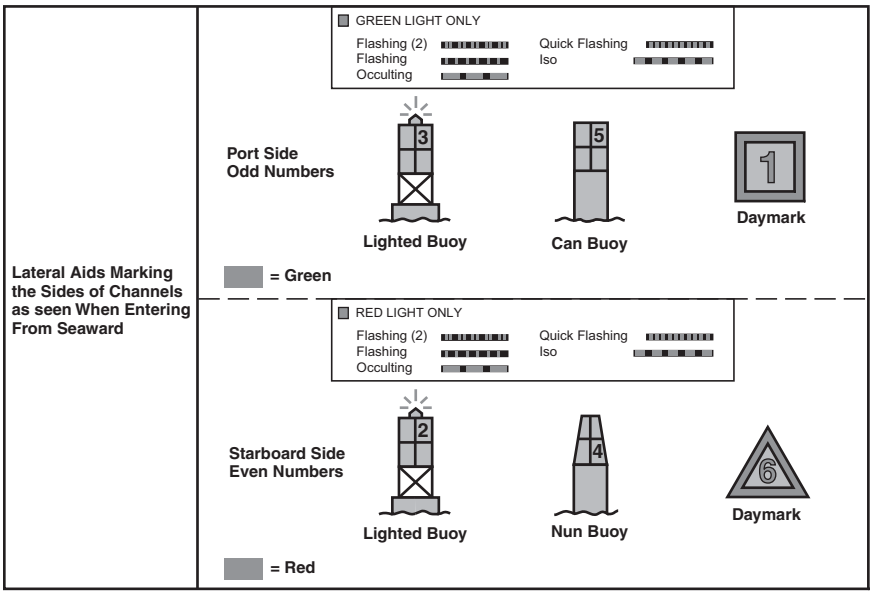

KC-1904_bw

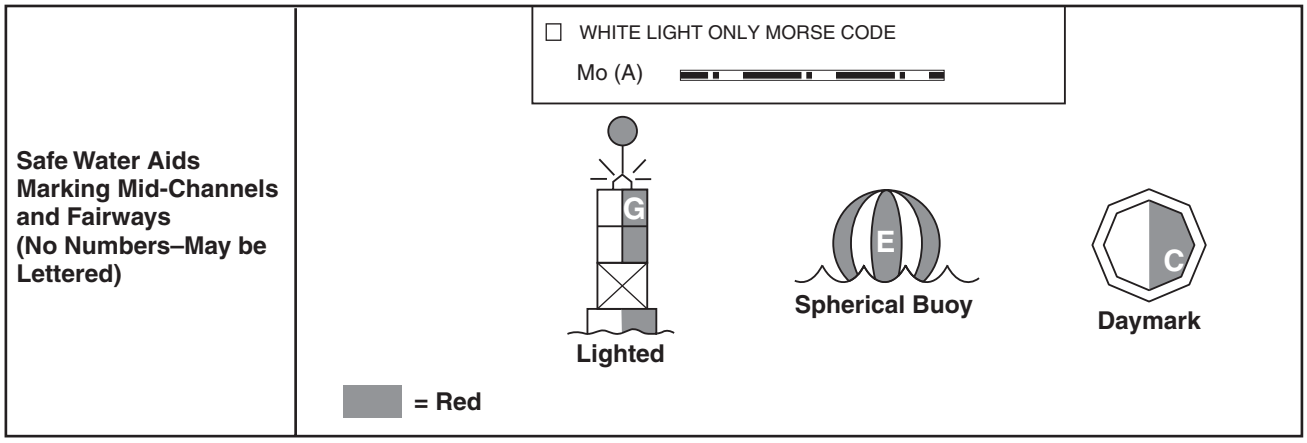

KC-1905_bw

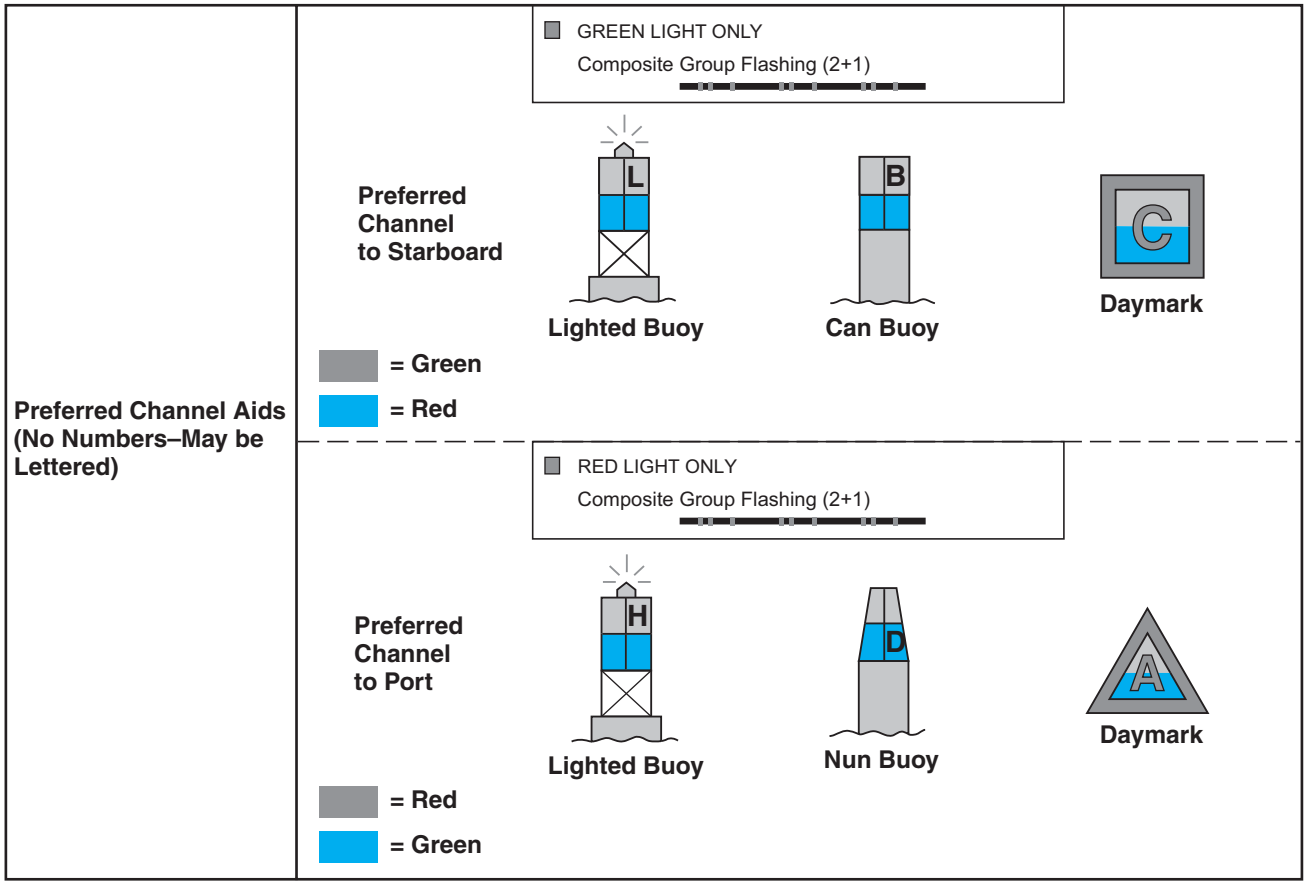

KC-1906_bw

Obstructions, channel junctions, etc. are marked with RED and GREEN horizontally striped buoys.

A RED band at the top means the preferred channel is to the left of the buoy; a GREEN top band means the preferred channel is to the right of the buoy.

Isolated Danger Markers

Isolated danger markers indicate an isolated danger which may be passed on all sides. These markers are colored black with one or more broad horizontal red bands and are equipped with a topmark of two black spheres, one above the other.

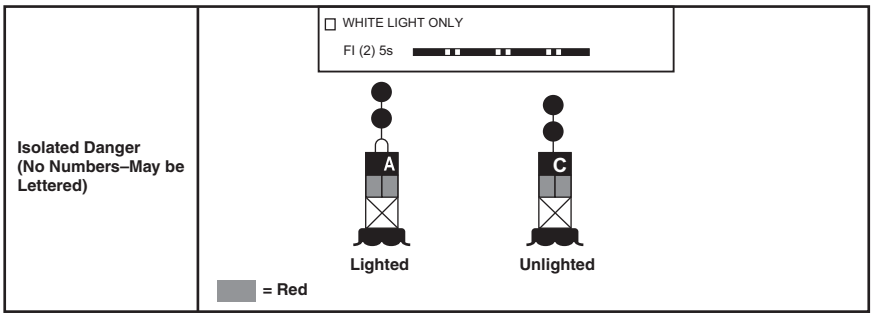

KC-1907_bw

On inland waters, a buoy with alternating vertical black and white stripes may be used to indicate that an obstruction or other danger exists between the buoy and the nearest shore. DO NOT pass between the buoy and the shore.

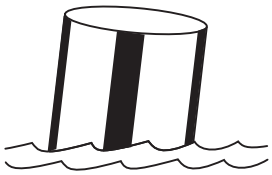

BLACK-STRIPED
WHITE BUOY

KC-1902

Light Structures

Maneuvering a boat at night can be dangerous and confusing. To aid boaters with navigation and warn of hazards, the U.S. Coast Guard and state and local authorities maintain a variety of light structures. Some light structures may be equipped with radio beacons, radar reflectors and/or fog signals.

Minor Lights – are colored according to the buoyage marking system in use. They are similar to lighted buoys, except they are usually higher and on more stable platforms to increase visibility. Most minor lights are part of a series to mark a channel, river or harbor.

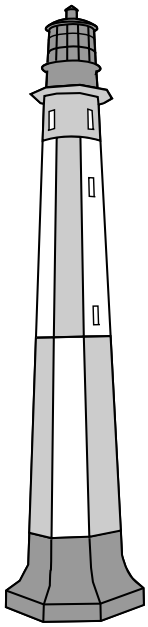

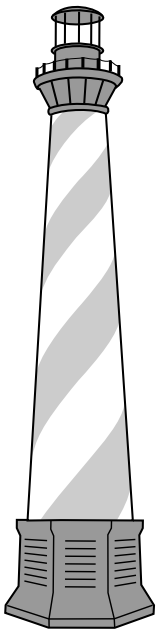

KC-0443

Lighthouses – can be found at harbor entrances, prominent headlands, isolated danger areas, and along the coasts. These striped or patterned structures have unique flashing characteristics to help identify them.

Range Lights – are usually visible in one direction and help a boat operator navigate in a generally safe direction. Steering a course to keep range lights arranged in a line (one on top of the other) will help guide a boat through a channel.

RANGE LIGHTS

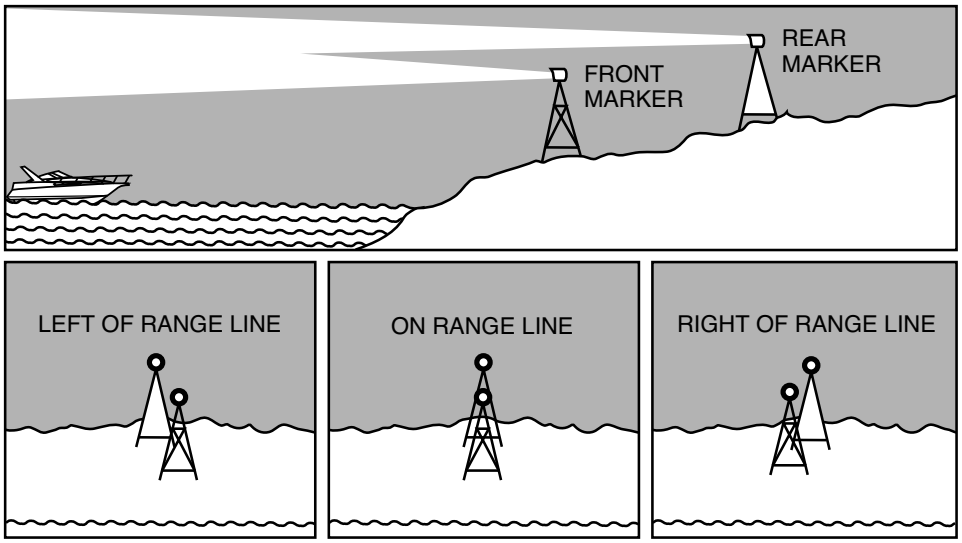

KC-0442

RIGHT-OF-WAY

CAUTION

In general, boats with less maneuverability have right-of-way over more agile craft. Likewise, smaller boats should give-way to larger ones. You must stay clear of the vessel with right-of-way and pass to his stern.

Whistle/Horn Signals

Signaling other boats with a whistle is similar to using turn signals on an automobile. It is not necessary to use a whistle signal every time a boat is nearby. In general, boat operators should signal their intention to avoid potentially confusing or hazardous situations.

It is customary for the privileged boat to signal first, and the give-way boat to return the same signal to acknowledge she understands and will comply. Use the danger signal (five or more short and rapid blasts) if intent is not clear.

Use the following whistle blasts early enough to be noticed and understood by other boaters:

- One long blast: Warning signal (coming out of slip or passing astern)
- One short blast: Pass on my port side
- Two short blasts: Pass on my starboard side
- Three short blasts: Engines in reverse
- Five or more short and rapid blasts: Danger Signal!

BASIC RULES OF THE ROAD

Privileged Boats

Privileged boats have right-of-way and can hold course and speed. Sailboats and boats paddled or rowed have the right-of-way over motor boats. Sailboats under power are considered motorboats. Small pleasure craft must yield to large commercial boats in narrow channels.

Burdened Boats

The burdened boat is the boat that must make whatever adjustments to course and speed necessary to keep out ot the way of the privileged boat.

Crossing Situation

In crossing situations, the boat to the right from the 12 o'clock to the 4 o'clock position has the right-of-way. It must hold course and speed. The burdened boat keeps clear and passes behind the privileged boat. Boats going up and down a river have the privilege over boats crossing the river.

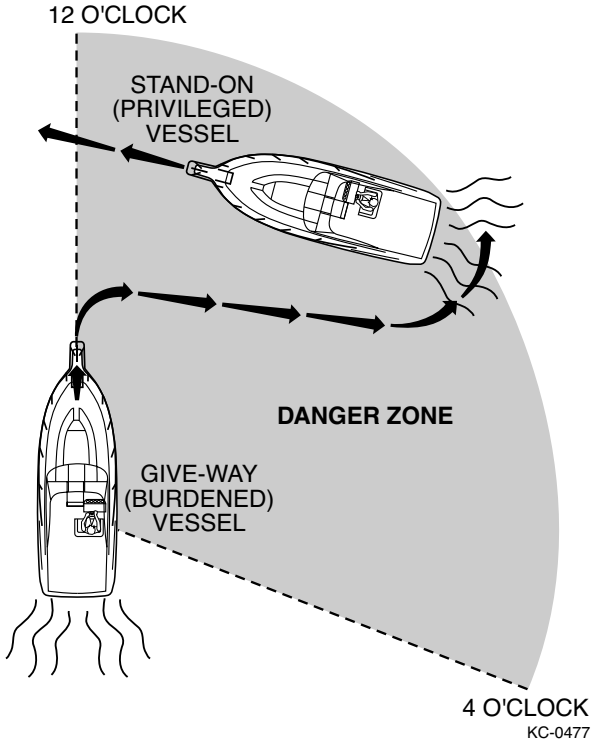

Meeting Head-On

Neither boat has the right-of-way in this situation. Both boats should decrease speed, should turn to the right and pass port-to-port. However, if

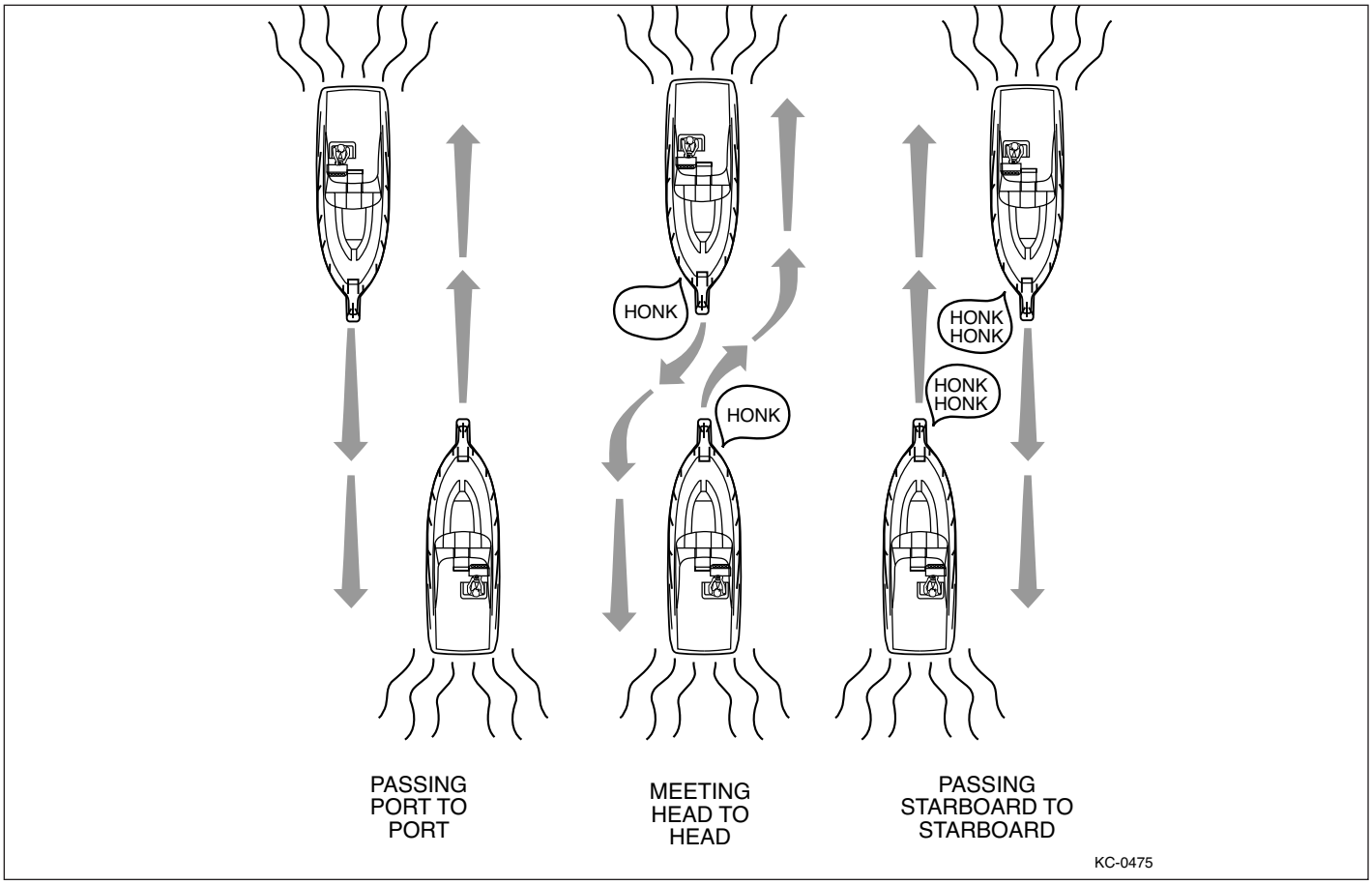

both boats are on the left side of a channel, each vessel should sound two short horn blasts and pass starboard to starboard.

Overtaking

The boat that is overtaking the one ahead of it is the give-way boat and must make any adjustments necessary to keep out of the way of the stand-on boat. The stand-on boat should hold its course and speed.

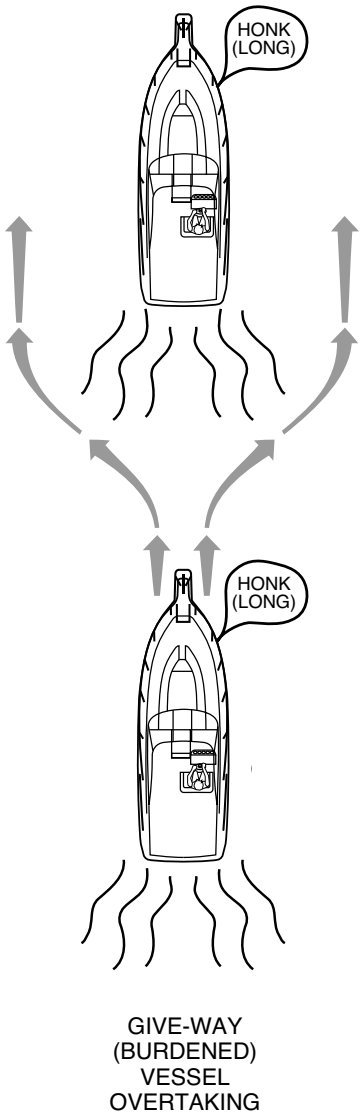

The General Prudential Rule

The general prudential rule regarding right-of-way is that if a collision appears unavoidable, neither boat has right-of-way. As prescribed in the Rules of the Road, both boats must act to avoid collision.

Night Running

Boats operating between sunset and sunrise (hours vary by state) must use navigational lights. Nighttime operation, especially during bad weather or fog can be dangerous. All Rules of the Road apply at night, but it is best to slow down and stay clear of all boats, regardless of who has right-of-way.

Protect your night vision by avoiding bright lights and have a passenger, if possible, help keep watch for other boats, water hazards and aids to navigation.

The size, speed, and direction of other vessels are determined at night from the running lights. A green light indicates the starboard side of the boat, and a red light indicates the port side. Generally, if you see a green light, you have the right-of-way; if you see a red light, give-way to vessel.

CONTROLS AND INDICATORS

3

Knowing the controls and indicators on your boat is essential for safe and proper operation. The controls and indicators shown in this section may be optional or slightly different than those on your boat.

SHIFT/THROTTLE CONTROLS

WARNING

Improperly maintained controls are hazardous and may cause sudden loss of control. Make sure all shift/throttle hardware and cables are regularly inspected and maintained. Improper maintenance may result in a loss of control, resulting in serious injury or death.

The shift/throttle control on your boat differs from model to model and may depend on the engine used. The following shift/throttle controls are typical of the operation of most controls used. Be sure to consult the engine or control manual for specific operational differences.

CAUTION

Never shift too quickly from forward to reverse. Stay in neutral, or idle position until the boat has lost most of its headway before completing the shift to reverse or engine damage may occur.

NOTICE

All shift/throttle controls are equipped with a safety switch for "start in neutral only" operation. Be sure the control is in neutral before attempting to start the engine.

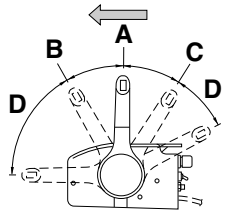

KC-0620.1

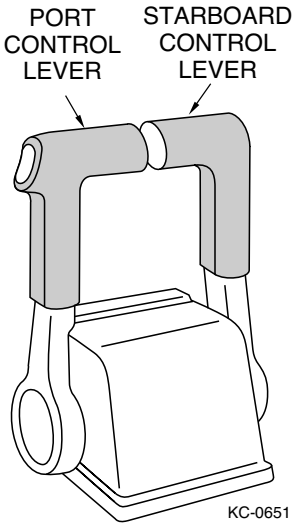

KC-0651

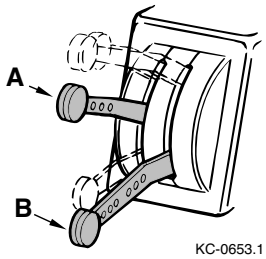

KC-0653.1

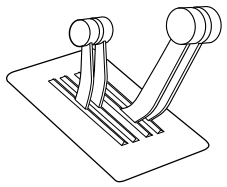
KC-0654.1

Single Lever Controls

Single lever controls operate as both a gear shifter and a throttle for a select engine. The lever is detented in the neutral position for starting. Shifting is accomplished by moving the lever into the first 15° of travel; push the lever for forward, and pull the lever back for reverse. By advancing the lever beyond 15°, you move from the shifting range to the throttle range. Never attempt to shift without the engine running. For engine warm-up, a separate lever or button on the control is used for throttle advance while the transmission remains in neutral.

A. Neutral Position - Safety switch will allow starting in this position only.
B. Forward Position - Press release button under handle to allow shifting to forward (or reverse) position.
C. Reverse Position - Do not shift quickly from forward to reverse.
D. Throttle Position - Pushing in forward or pulling in reverse increases engine speed.

Twin engine boats equipped with single lever controls have two levers, a left lever for port engine control and a right lever for the starboard engine. This makes it possible to operate one engine in forward and the other in reverse for easier maneuvering in tight quarters.

Dual Lever Controls

Dual lever controls have individual levers for transmission shift and engine throttle. For the shift lever(s), neutral is the detent position in the middle of the lever's travel. Pushing the lever(s) up or ahead shifts the transmission(s) into forward and pulling the lever(s) down or back shifts the transmission(s) into reverse. For the throttle lever(s), full throttle position is all the way up or forward and idle position is all the way down or back.

For engine warm-up, the shift lever(s) are positioned in neutral and the throttle lever(s) are advanced as needed. For maneuvering at slow speed, it is sometimes desirable to operate one engine in forward and the
other in reverse.

A. Shift Lever - Neutral is in center detent position; push for forward, pull for reverse.
B. Throttle Lever - Full throttle is all the way up, idle is all the way down.

Dual lever controls on twin engine boats have individual levers for transmission shift and engine throttle for each engine, left levers for the port engine and right levers for the starboard engine. Twin engine controls are usually arranged with shift levers (all one size and color) grouped together and throttle levers (all the same size and color, but usually larger than the shift levers) grouped together.

INSTRUMENTS

All instruments are illuminated for night operation. Their type, number, and location vary; some may not appear on your model. If your boat is equipped with twin-engines, there may be two sets of some of the instruments described in this section; one set for each engine. typically, instruments for the port side engine will be found on the port side of the helm control panel; likewise for the starboard engine instruments.

If an instrument reading is outside of normal or recommended ranges, investigate cause immediately or see your dealer. Consult the engine operator's manual for the normal recommended ranges.

Tachometer

Registers engine speed in revolutions per minute. Use this gauge to keep the engine within the proper operating range. Consult the engine manual for the proper RPM operating range for your engine.

Speedometer

Registers forward boat speed relative to the water in miles per hour. Use this gauge to monitor fuel consumption and propeller performance. Since most marine speedometers are operated by water pressure, accuracy is only approximate.

Fuel Gauge

This gauge registers approximate fuel level in the gas tanks. Since the accuracy of your gauge varies with the attitude of your boat (trim and list), and the fuel pick-up tube cannot withdraw all of the fuel in the tank, it is wise to observe the One Third Rule. Use one third of your gas to go out, one third to come back, and one third as a reserve.

Water Pressure Gauge

Registers the water circulated by the water pump in pounds per square inch (PSI). Use this gauge to observe that the engine cooling system is operating properly. Consult the engine manual for the normal operating PSI range.

Engine Trim Gauge

Shows the position of the outdrive unit and indicates the relative position of the bow, from a horizontal plane. Use this gauge to monitor boat trim.

Engine Sync Gauge

Indicates synchronization of engine speeds. Adjust throttles so that needle is centered. Excessive noise and vibration can occur if engines are not properly synchronized to each other

Voltmeter

Indicates the condition of the main or cranking battery in volts DC. Normal operating range is 12+ volts.

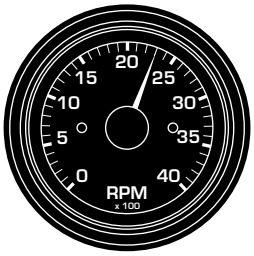

KC-0700

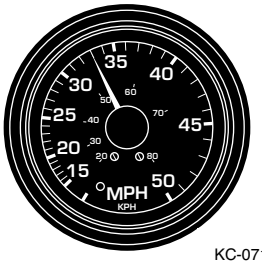

KC-0710

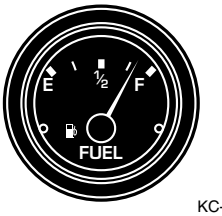

KC-0720

KC-0730

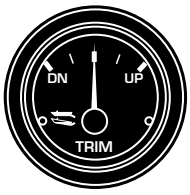

KC-0740

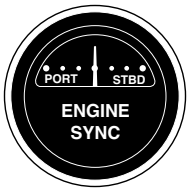

KC-0702

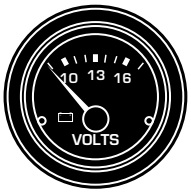

KC-0750

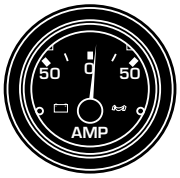

KC-0760

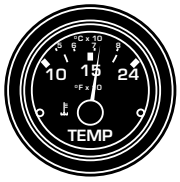

KC-0770

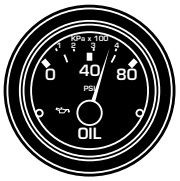

KC-0780

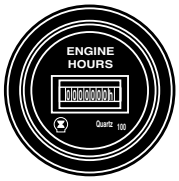

KC-0782

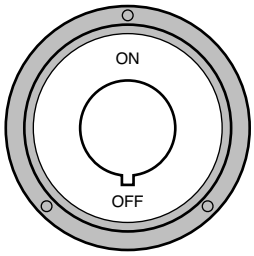

TYPICAL
BATTERY SWITCH
KC-0704

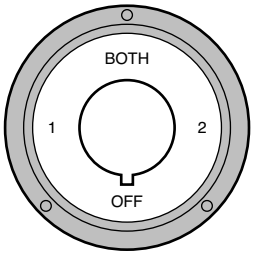

TYPICAL BATTERY
SELECTOR SWITCH
KC-0705

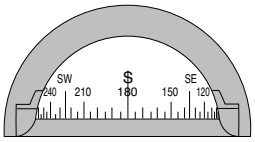

KC-0703

Ammeter

Measures the charging current in the electrical system. Consult the engine manual for the normal operating range.

Engine Water Temperature Gauge

Indicates the engine water/coolant temperature inside the engine. Consult the engine manual for the normal operating range.

Engine Oil Pressure Gauge

Indicates the pressure of the lubricating oil inside the engine. Consult the engine manual for the normal operating range.

Engine Hourmeter

Registers accumulated engine operating time, and is activated when the ignition switch is in the “ON” position. Be aware that time will be logged whenever the ignition switch is “ON”, even when the engine is not running. Use the hourmeter to keep accurate logs for scheduled maintenance.

SWITCHES

Each electrical circuit on your boat is equipped with a control switch. Some switches may have an LED indicator for easy ON/OFF identification. Most switches will have a fuse holder, or circuit breaker adjacent to the switch.

Master Power Switch – Disconnects the boat electrical systems from the batteries. When not using the boat, keep this switch in the OFF position.

Battery Switch – Connects the battery(ies) to the electrical system. Provides isolation and positive disconnect of battery(ies) to protect against tampering, electrical fire hazards, and battery run-down. Rotate switch to the OFF position when the boat is not in use.

WARNING

Never turn switch to the OFF position while the engine(s) is running or serious alternator/electrical system damage could occur.

Battery Selector Switch – Operates as a battery switch and provides the additional ability to connect two batteries in parallel for starting in case one battery is low. Allows emergency starting of either engine with the opposite battery. May be used in conjunction with an isolator and third battery. Refer to Ship Systems for more information.

Windshield Wiper Switch – Controls operation of windshield wipers.

Compass – Aids with navigation by indicating where NORTH is located. The compass must be adjusted for the area you are in and

can be affected by instruments installed adjacent to it. The compass must be compensated (corrected) for deflections caused by magnets and electrical wiring in its vicinity.

After all optional equipment has been installed in the helm area, the compass should then be compensated. Since the compass is an important navigational aid, the compensating should be done by a qualified compass adjuster. It is seldom that a compass can be corrected to zero deviation on all headings, so he will provide you with a deviation card or chart showing the correction to be applied when laying out a compass course or making your navigational calculations.

COMPASS DEVIATION		
HEADING	WEST	EAST
30°	5°	
60°	5°	
90°	6°	
120°	4°	
150°	3°	
180°	1°	
210°		1°
240°		2°
270°		4°
300°		4°
330°		5°
360°		6°

KC-0921

After the compass is adjusted, do not permit items which might affect it to be placed near the compass, even temporarily. The compass must be readjusted if any influencing item for which it has been compensated is removed or relocated, or added in the vicinity. As a rule of thumb, electrical or metal items should be kept three or more feet away from the compass so as not to affect its magnetic field.

Get to know your compass. Watch how it swings. Check that its readings are consistent on frequently sailed courses. Note if it becomes sluggish, and above all, if it becomes erratic. These two signs warn of alien magnetism or damaged compass.

Fuel Gauge Switch – Allows you to check the amount of fuel in the fuel tank when the navigation lights are OFF or the ignition switch is OFF.

Boarding and Courtesy Lights – Are controlled by selector switches for operation of boarding lights and cockpit courtesy lights. The main DC breaker (Master Power) switch must first be in the ON position to activate lighting.

Navigation Lights Switch – Controls the running and anchor lights for night operation. NAV position will turn on the red and green bow lights, white stern light, and gauge illumination. ANC position turns on only the white stern light for night anchoring.

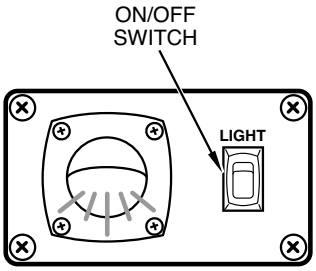

KC-0935

CAUTION

Never operate the boat between sunset and sunrise with the switch in the anchor light position. Running lights are required to indicate direction and right-of-way at night.

Blower Switch – Activates the engine box ventilation blower to remove explosive fumes from the box and bilge areas.

WARNING

The blower must be operated for a minimum of five minutes before each time the engine is started. In addition, the blower should be operated continuously when at idle or slow speed running. Failure to operate the blower can lead to conditions favorable for an explosion, with severe personal injury or death resulting.

KC104-18

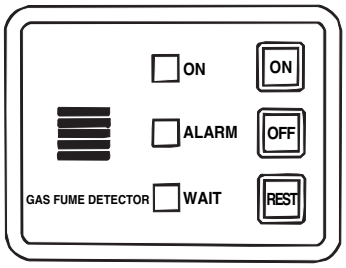

KC-0936

BATTERY CHARGER

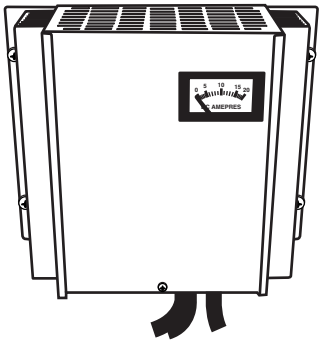

KC104-16

Bilge Switch – Activates the bilge pump to remove excess water from the bilge. Some models are equipped with an automatic bilge pump setting. Switch to AUTO whenever the boat is in operation, water will be pumped-out as it enters the bilge.

CAUTION

Be sure to switch the bilge OFF when the boat is not in use. Wave action or trailer travel can cause the pump to run down the battery.

Ignition Switch – Starts and stops the engine. Be sure to consult the engine operator's manual for information.

Depth Sounder – Indicates the distance between the bottom of your boat and the earth's surface directly below the transducer. To avoid running aground in shallow water, always add extra distance to meter reading. Consult the depth sounder operator's manual for more information.

Gas Fume Detector – Alarm will sound when gas fumes are detected. Turn on bilge blower to evacuate fumes. The sensor for the vapor detector is mounted in the bilge area where fumes collect. Test the unit before each cruise to check for proper performance.

WARNING

If the gas fume detector indicates a dangerous condition, do the following:

- **DO NOT operate electrical equipment.**
- **Extinguish open flames and smoking materials immediately.**
- **Turn engine(s) OFF.**
- **Wait 5 minutes before opening the engine compartment to investigate the cause.**
- **Determine cause and correct immediately before resuming operation.**

Engine Alarm System – Sounds alarm if the engine temperature exceeds set limit or if oil pressure drops below set range. If alarm sounds during operation, immediately shut down engines and determine cause. Consult the engine operator's manual for more information.

CAUTION

Continued operation after the warning alarm has sounded may cause severe engine damage.

Battery Charger – Operates from the shore power or generator systems. It converts 110 volts A.C. to 12 volts D.C. to charge the batteries. The battery charger will either deliver full output to a discharged battery, or deliver a trickle charge to a battery with minimal discharge. Consult the battery charger operator's manual for more information.

Battery Isolator – Allows you to charge multiple batteries. The isolator automatically detects how much of a charge to send each battery. It prevents batteries from being overcharged, and eliminates a higher charged battery from discharging into a lower charged battery. Consult the battery isolator operator's manual for more information.

Horn Button – Push and hold to sound the horn.

Trim/Tilt Switch – Your engine is equipped with power trim and tilt, this switch activates that function. Push and hold the switch until the engine is at the desired angle. Use this switch in combination with the trim gauge to maximize boat performance in the water. The tilt switch raises the drive unit for trailering.

Trim Tab Switches – These rocker switches control the trim tabs located on the port and starboard transom. Adjusting trim tabs will improve the ride of your boat and correct listing from side to side due to varying weight conditions. See the RUNNING section of this manual for further trimming procedures.

Engine Stop Switch and Lanyard – The engine stop switch stops the engine when engaged. Attach the lanyard to the boat operator whenever the engine is running. If the operator is thrown from the seat or moves too far from the helm the lanyard will engage the switch and shut off the engine.

To attach the lanyard, hold out the button head and slide the fork beneath the safety switch. Attach the hook on the opposite end of the lanyard to a strong piece of clothing on the operator, such as a belt loop.

⚠ WARNING ⚠

Attach the Engine Stop Switch lanyard to the operator before starting the engine. This will prevent the boat from becoming a runaway if you are accidentally thrown from the boat.

The Engine Stop Switch can only be effective when it is in good working condition. Observe the following:

- **Never remove or modify the Engine Stop Switch and/or lanyard.**
- **Lanyard must always be free from obstructions that could interfere with its operation .**

ONCE A MONTH: Check switch for proper operation. With engine running, pull lanyard. If engine does not stop, see your DEALER for replacement of switch.

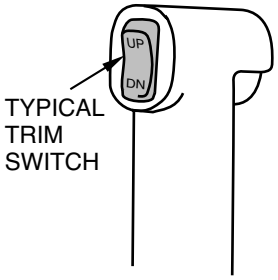

KC-0931

TRIM TAB SWITCHES

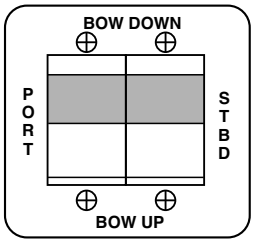

KC-0932

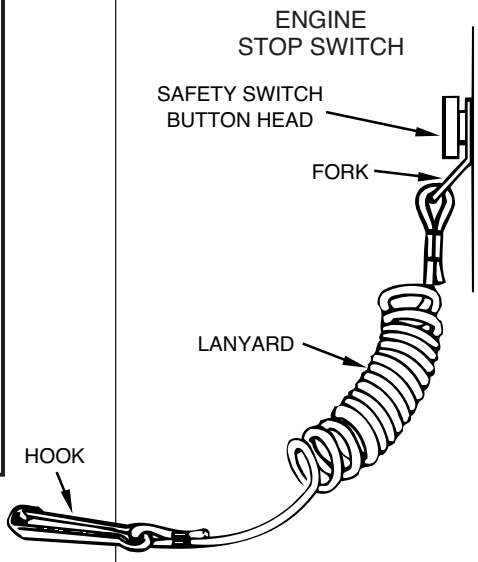

KC-0950

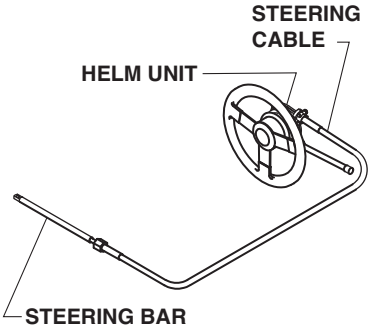

KCC 1885R1

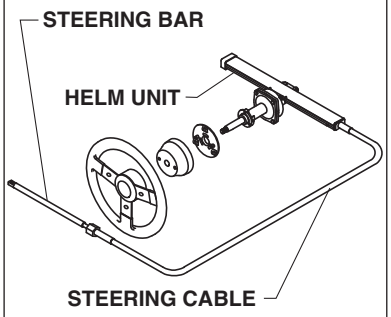

KCC 1887R1

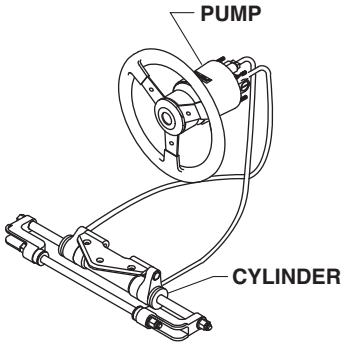

KCC 1888R1

STEERING SYSTEMS

Your boat is equipped with a steering wheel for controlling the direction of travel. The steering system itself may be mechanical, power-assisted or hydraulic in operation.

Boat steering is not self-centering. Always keep a secure grip on the steering wheel to maintain full boat control.

With mechanical steering, the helm unit transfers rotary motion of the steering wheel to linear motion in the cable which pushes or pulls the steering arm. Some boats are equipped with two cables; one cable pushes and the other pulls.

With power-assisted systems, the helm unit transfers rotary motion of the steering wheel to linear motion which pushes or pulls a cable. The cable movement is sensed and a signal is sent to a hydraulic pump which moves the hydraulic cylinder attached to the steering arm.

With hydraulic steering, the manual hydraulic steering system does not act like the power steering system in your car. The effort required to turn the wheel will increase as the system is called on to exert more force. As the steering wheel is turned, the pistons in the manual pump force hydraulic fluid to the cylinder, which then provides the force necessary to turn the boat.

4 OPERATION

This section describes the basics of fueling, starting, running, trimming, and docking your boat. Since there is a variety of control and engine options, be sure to consult the other owner's manuals provided with your boat.

FUELING

Built-in tanks have the fuel filler aft in the boat. The fuel tank is equipped with either a shut-off valve or anti-siphon valve. The shut-off valve requires you to manually turn the fuel valve, while the anti-siphon valve operates automatically. Because gasoline fumes are heavier than air, they will sink to the lowest part of your boat, such as the bilge. It is important to always evacuate fumes with the blower before attempting to start the engine.

⚠ WARNING ⚠

Gasoline is extremely flammable and highly explosive under certain conditions. When refueling, always stop the engine and never smoke or allow open flames or sparks within 50 feet of the fueling area.

Take care not to spill gasoline. If gasoline is spilled accidentally, wipe up all traces of it with dry rags and immediately dispose of the rags properly onshore. When fueling:

- Know your fuel tank capacity. Be sure to have enough fuel to reach your destination. If departing for an extended cruise, know the availability of fuel along your route.
- Avoid fueling at night, except under well lighted conditions.
- Moor your boat securely to the dock. Know the location of fire extinguisher in case of emergency.
- Keep accurate records on fuel consumption. A fuel log tracking fuel use over time will help determine average consumption.
- Close all doors, hatches, windows, and other compartments.
- Extinguish cigarettes, pipes, stoves, and all other flame producing items.
- Make sure all power is off, and do not operate any electrical switches.
- Remove fuel fill cap. Insert hose nozzle and make sure nozzle is in contact with or grounded against fill opening. This will reduce the risk of static spark.

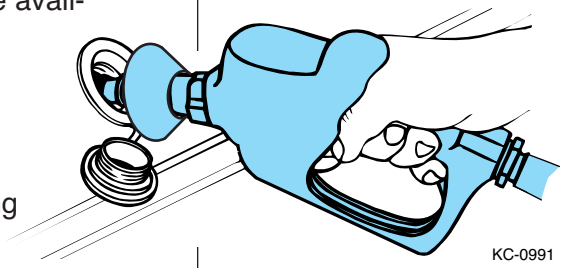

- Add fuel. Do not fill to capacity to allow for fuel expansion.
- Check oil level.

Notice

Each time you fill up, inspect fuel lines for leaks and hose deterioration.

Notice

The Federal Water Pollution Control Act prohibits the discharge of oil or oily waste into the water. Violators can be fined $5,000. We urge you to protect our fragile environment by avoiding any type of discharge, trash, or litter into our waterways.

After fueling, you should:

- Close fill cap securely and wipe up spillage.
- Open all windows, hatches, doors, and compartments.
- Check all fuel lines and connections for leakage.
- Run blower for at least five minutes before starting your boat. If you smell gasoline fumes, continue to run blower.

STARTING

The following starting guidelines cover a wide variety of engine power and accessory options. Be sure to follow the starting instructions contained in the engine operator's manual and tailor starting procedures for your particular model.

- Complete Pre-Operation checks found in the Getting Underway section.
- Turn battery selection switch(es) to ON position.
- Open engine hatch.

- Operate bilge blower for at least five minutes prior to starting engine(s). Continue to operate until underway at cruising speed.
- Use manual bilge pump switch to remove any water in bilge below the automatic switch level.
- Make sniff test with your nose; this is a very effective way to detect fumes.
- Open seacocks for engine cooling water. Seacocks for washdowns, heads, air conditioning, etc. are opened on an as needed basis.

TYPICAL SEACOCK AND STRAINER

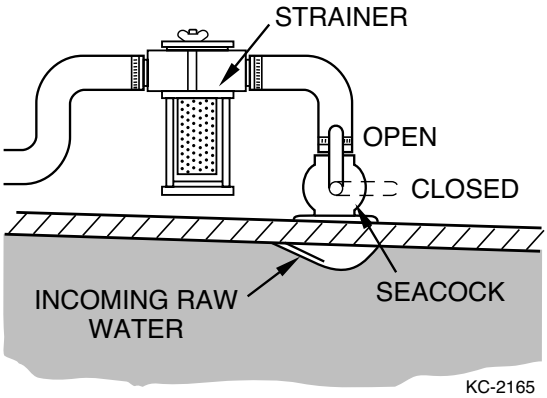

- Close engine hatch.
- Move stern drive(s) to full IN position.
- Move trim tab controls to the full UP position.
- Put shift lever(s) in NEUTRAL position.
- Move throttle lever(s) fully forward and return to idle position. Throttle linkage and cable must move freely.
- Slightly advance throttle lever forward.
- Turn the ignition key switch of one engine to START position. Release key immediately after engine starts.
- If engine will not start, move throttle to FULL position once or twice to actuate the carburetor accelerator pump.
- Operate engine at approximately 1000 to 1200 RPM for a few minutes before starting other engine (if equipped).
- Repeat steps for remaining engine, if equipped.
- Make sure gauges indicate normal operating ranges. If not, shut down engine(s) immediately and determine cause.
- After running engine(s) at 1000 to 1200 RPM for several minutes, reduce throttle to idle speed until you’re ready to depart.

WARNING

The blower must be operated for a minimum of four minutes before each time the engine is started. In addition, the blower should be operated continuously when at idle or slow speed running. Failure to operate the blower can cause an explosion.

CAUTION

To prevent damage to the engine:

- **Do not operate starter longer than a few seconds; let it cool for several minutes before trying again.**
- **Shift quickly and without hesitation. Never ease engine into gear or shift mechanism could be damaged.**

CAUTION

Go slowly in reverse to avoid taking water in over the transom. You can swamp the boat by taking on too much water.

SHIFTING/RUNNING

Follow these guidelines when shifting your boat:

- Pause in neutral before shifting from forward to reverse, or reverse to forward.
- Avoid shifting into reverse while the boat is traveling forward at speed.
- Keep the shifter control clean and clear of obstructions.

WARNING ALARM

CAUTION

Continued operation after the warning alarm has sounded may cause severe engine damage.

Your boat is equipped with a warning alarm that will sound if an engine problem develops. If the warning alarm sounds, IMMEDIATELY throttle back to idle speed and shift into neutral. IMMEDIATELY check the gauges and stop the engine. On some models, the horn may emit a short chirping sound during starting to verify operation.

STEERING CONTROLS

All boats have a tendency to wander somewhat at slow speeds. A natural reaction to this effect is to steer the boat back and forth in an attempt to compensate for wandering. Invariably, the compensation will result in over-steer and only worsen the effect. Keep the steering wheel in the center position, the boat will wander back and forth somewhat, but the overall course will be a straight one.

WARNING

The steering system must be in good operating condition for safe boat operation. Frequent inspection, lubrication, and adjustment by your dealer is recommended.

STOPPING

1. Slowly bring throttle control to the idle position and the shift control to the NEUTRAL position. Bring the trim tabs to the UP position and the outdrives to the IN position accordingly. If the boat has been driven for a long period of time at high speed, allow the engine a 2-3 minute cool-down period at low idle.
2. Turn the ignition key to the OFF position.
3. If any problems were encountered during the outing, have the boat inspected by your dealer and request any necessary repairs before the next outing.

CAUTION

Do not use the engine stop switch for normal shutdown. Doing so may impair your ability to re-start the engine quickly or may create a hazardous swamping condition.

End of Day Shutdown

- To prevent marine growth from accumulating on the hydraulic cylinder shafts, make sure trim tabs are UP and outdrives are in the full IN position.
- Lock ignition key switch and remove ignition keys.
- Stow and secure all equipment.
- Pump bilges dry with manual switch. Leave on AUTO when finished.
- Close all inlet seacocks and fuel valves.
- Use fresh water to flush head and engines.
- Inspect boat for damage.
- Clean any spills, stains, or moisture from boat. Inspect and clean sea strainers.
- Turn battery select switches to OFF.

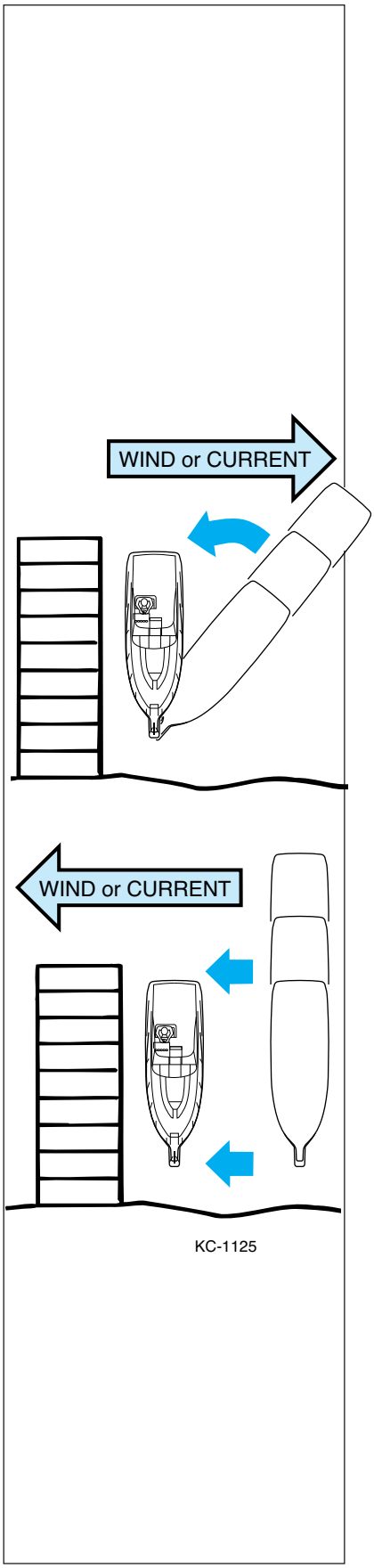

- Turn off breaker on electrical panel except for the bilge pumps.
- Remove any food, garbage, and wet gear from boat.
- Secure lockers, hatches, and canvas as equipped.
- If keeping boat in water, hook up shore power cord, make sure battery charger light is ON, and check mooring lines.

DOCKING

Practice docking before attempting it for the first time. Use a float, like a plastic milk jug with a line and small weight, as your docking target.

WARNING

Never use your hand, arm or other part of your body to attempt to keep the boat from hitting the dock. The boat could push against the dock, causing an injury.

Follow these guidelines when docking:

- Approach docks with the port side of the boat if possible.
- Come to a stop a short distance from the dock, then proceed slowly.
- Have fenders, mooring lines, and crew ready.
- Observe how the wind and current are moving your boat. Approach the dock with the boat pointed into the wind, if possible. If the wind or current is pushing you away from the dock, use a sharper angle of approach. If you must approach the dock downwind or down current, use a slow speed and shallow angle. Be ready to reverse to stop and maintain position.
- If there is no wind or current, approach the dock at a 10 to 20 degree angle.
- If possible, throw a line to a person on the dock and have that person secure a bow line.
- With the bow secure, swing the stern in with the engine, or pull it in with a boat hook.

Before tying-up the boat, be sure to use enough fenders to protect the boat from damage. If possible, tie-up with the bow towards the waves with a good quality double-braided nylon line. Tie-up only to the lifting or tie-down eyes; never use the handrails or windshield frames. If the boat is to be moored for a long period of time, use chafing protectors on lines to protect the gelcoat finish. Leave a little slack in the lines to allow for some wave movement or tidal action if applicable.

Follow these guidelines when departing:

- Very slowly shift into forward at idle speed.
- When the stern moves away from the dock, turn the engine away from the dock.
- Cast off bow line and back away.

If the wind or current is pushing away from the dock, cast off all lines and allow to drift until you are clear.

BOAT TRIM

The performance of your boat depends on load weight and distribution. Distribute weight evenly, from bow to stern, and also from port to starboard. After loading, the boat's trim can be adjusted by changing the engine trim angle and trim tabs.

DRIVE TRIM ANGLE

Engine trim angle is the angular relationship between the lower drive unit and the transom of the boat. Boat trim while underway greatly affects boat performance and efficiency. For best results, the boat should be on plane and trimmed to reduce the wetted surface. With less boat in the water, both speed and fuel economy increases. Engines with manual trim must be adjusted for best overall operation for the load and conditions. Engines with power trim should be adjusted continuously for best results.

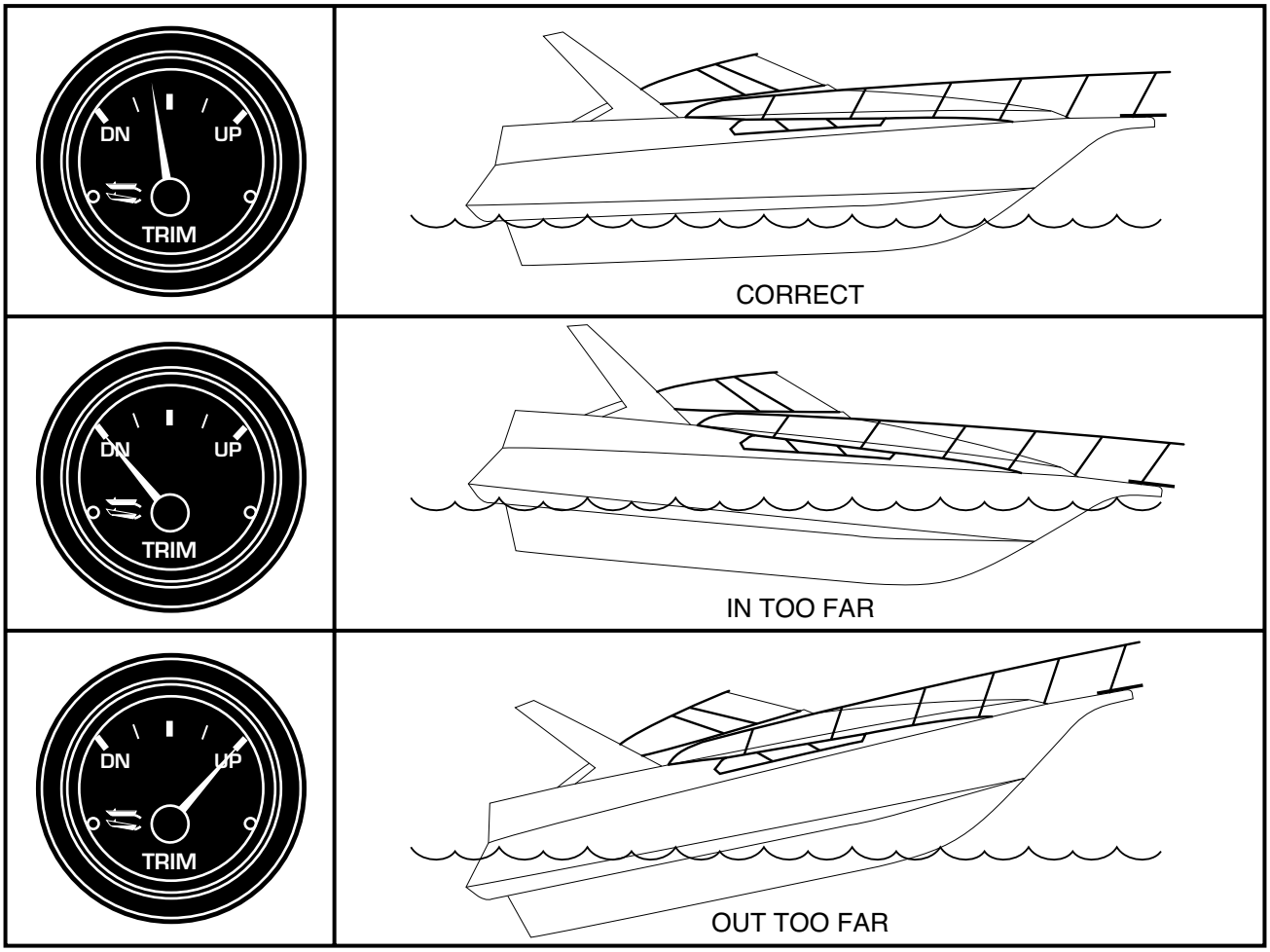

KC-1157A

If the engine is trimmed in too far (closer to the boat bottom), speed drops, fuel economy decreases, and the boat may not handle correctly. However, it does provide better acceleration from a stand still; and because it forces the bow down, visibility is improved. If the engine is trimmed out too far (away from the boat bottom), steering torque may increase, the boat may be difficult to get on a plane, and may bounce.

WARNING

Do not trim the engine out too far or the boat may begin to "porpoise" (bounce up and down). Porpoising reduces control and visibility.

To use power trim effectively, always start with the engine trimmed in. As the boat planes, increase the angle out. Experience is the best teacher for understanding proper trim.

Trim Tabs

Water is deflected and redirected as the trim tabs are raised and lowered. This change in water flow creates upward pressure under the tabs, and raises the stern. When the stern raises, the bow is lowered. Likewise, lowering the port tab will cause the port stern to raise, making the starboard bow lower.

Using trim tabs in conjunction with the power trim will compensate for uneven weight distribution, listing, water conditions, and other factors that cause inefficient operation. Remember that trim tabs are trimming the hull while power trim is trimming the engine drive.

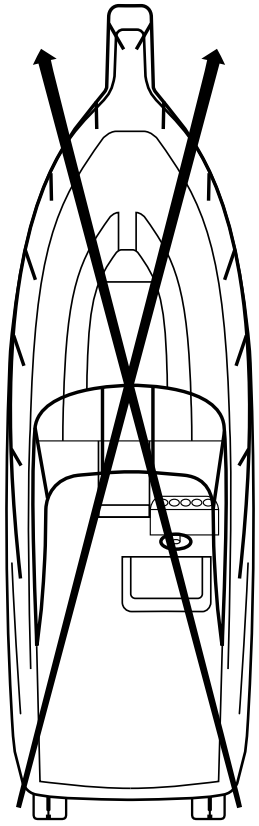

PORT TAB LOWERS
- PORT STERN RISES
- STARBOARD BOW LOWERS

STARBOARD TAB LOWERS
- STARBOARD STERN RISES
- PORT BOW LOWERS

KC-1155

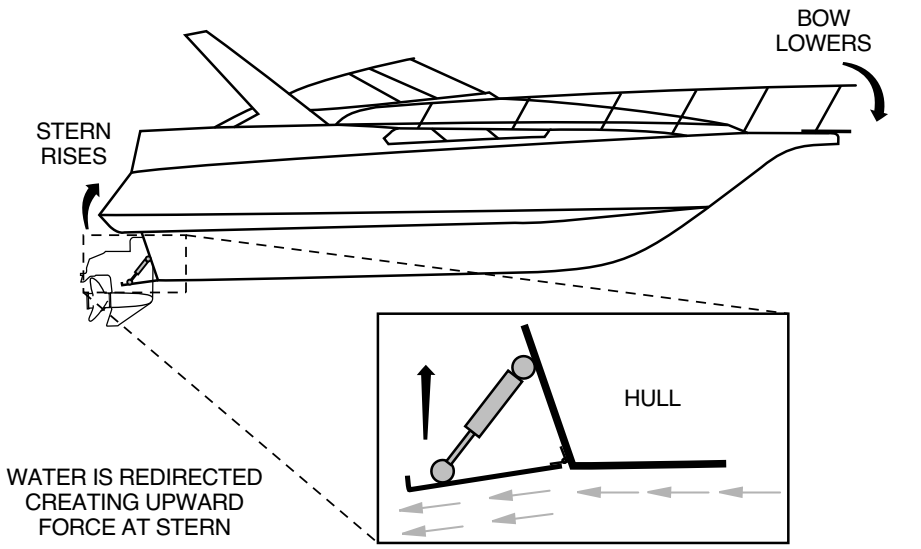

KC-1154

To use the trim tabs with the power trim

1. Adjust the trim tabs to achieve a planing attitude.
2. Use the power trim to position the prop path parallel to the water flow.

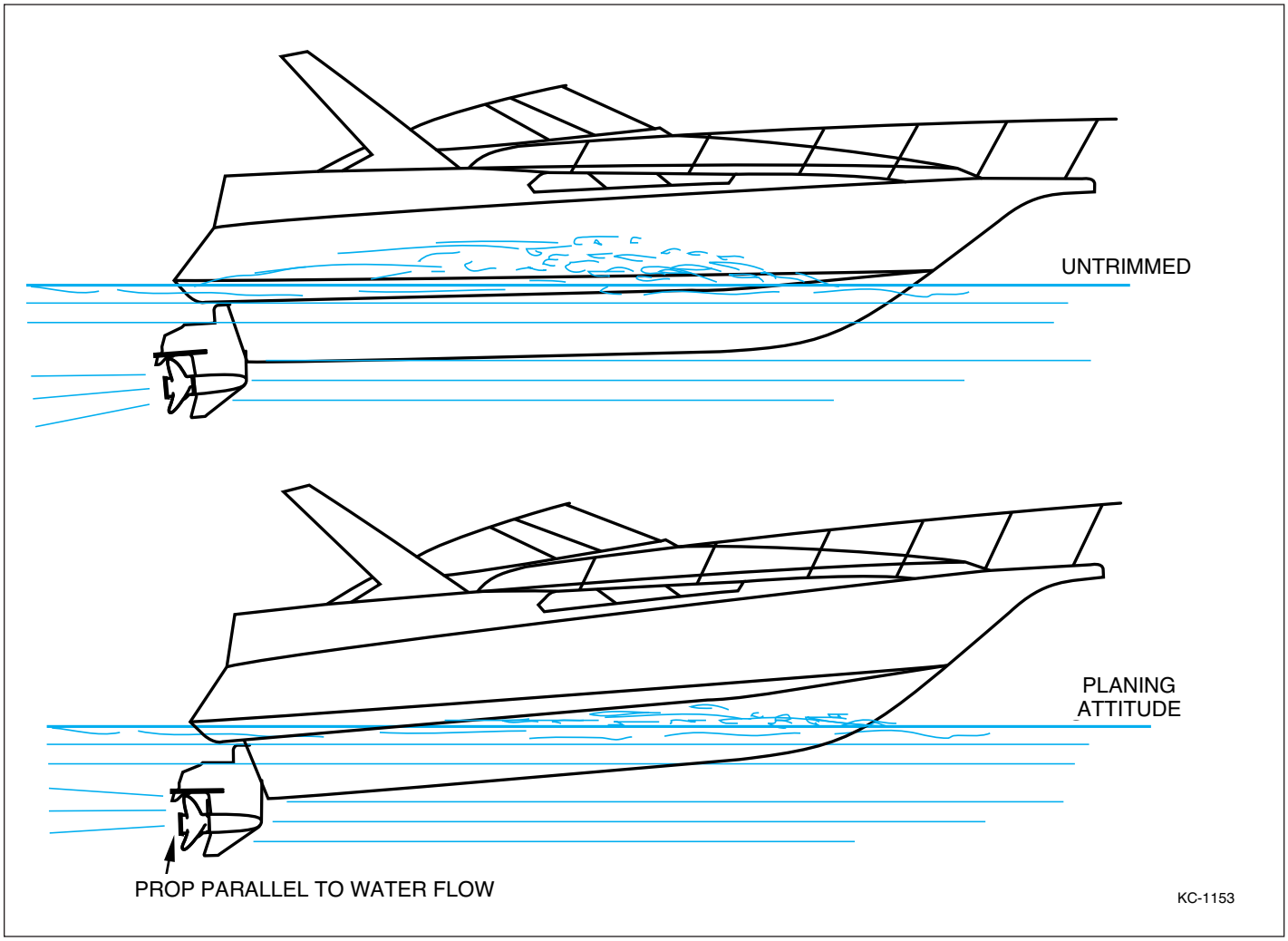

3. Readjust the trim tabs to fine tune attitude.
4. Do not overtrim because bow will dig in, causing the boat to veer.
5. To avoid listing, do not move one tab significantly further down than the other while underway.

WARNING

Improper use of trim tabs at high speeds can cause an accident or injury.

GETTING UNDERWAY

5

There are many things to consider to make your boating trip safe and enjoyable. This section includes a safety checklist, boarding guidelines, boat loading, and capacity information.

The contents of this section should be read and understood before casting off. Remember, if you have a problem during your cruise, you can't get out and fix it, or walk to safety or for help.

You are responsible for the safety of all passengers, the boat, and any damage the boat or its wake may cause. Always keep passengers from blocking your view so that you do not run into other boats, swimmers, water skiers, personal water vehicles, or aids to navigation.

SAFETY CHECKLIST

The following checks are essential to safe boating and must be performed before starting the engine. Get in the habit of performing these checks in the same order each time so that it becomes routine.

⚠ WARNING ⚠

DO NOT launch the boat if any problem is found during the Safety Check. A problem could lead to an accident during the outing causing severe injury or death. Have any problem attended to immediately; see your dealer.

Pre-Operation

- Check the weather report, wind and water conditions.
- Check that the required safety equipment is on board.
- Check that the fire extinguisher is fully charged.
- Check that bilge drain plug is installed properly.
- Check that no fuel, oil or water is leaking or has leaked into the bilge compartment.
- Check all hoses and connections for leakage and damage.
- Check engine and stern drive oil levels.
- Check stern drive pump and trim tab pump fluid levels.

✔ **WEATHER**

✔ **EQUIPMENT**

✔ **FIRE EXTINGUISHER**

✔ **DRAIN PLUG**

✔ **BILGE**

✔ **HOSES**

✔ **OIL LEVELS**

✔ **FLUID LEVELS**

✔ STEERING

✔ STRAINERS

✔ EXHAUST

✔ PROPELLER

✔ WATER INTAKE

✔ BATTERY

✔ CIRCUITS

✔ CONTROLS

✔ STEERING

✔ MAINTENANCE

✔ GAUGES

✔ FUEL

- Check hydraulic steering fluid level.
- Make sure water strainer for raw water intake is clean.
- Check that raw water inlet seacocks are open.
- Inspect exhaust connections for water leaks or gas stains. Tighten loose connections.
- Check the propeller for damage.
- Check the engine cooling water intake pick-up for blockage.
- Check that battery terminals are clean and tight.
- Check electrical circuits (lights, pumps, horn, etc.) for proper operation.
- Check that throttle/shift control is in neutral.
- Check that the steering system operates properly.
- Check that all required maintenance has been performed.

During Operation

- Check gauges frequently for signs of abnormal behavior.
- Check that controls operate smoothly.
- Check for excessive vibration.

After Operation

- Fill fuel tank to prevent moisture due to condensation.
- Check for fuel, oil and water leakage.
- Check the propeller for damage.
- Complete END OF DAY SHUTDOWN checks found in the Operation section of this manual.

SAFETY EQUIPMENT

Federal and local laws require certain safety equipment to be on board at all times. In addition, responsible boaters carry other equipment in case of emergency. Check with local boating authorities for any additional requirements over and above federal requirements.

BOARDING

When boarding the boat, always step in. Do not jump. Avoid stepping on potentially slippery surfaces. Board one person at a time.

Do not board the boat while carrying gear. Set gear on the dock, board the boat and then pick-up the gear.

Boat Loading

The performance of your boat is dependent on load weight and distribution. Passengers should board one at a time and should distribute themselves to maintain trim. Remember to distribute weight from right to left, and also from front to back.

⚠ WARNING ⚠

All passengers should be carefully seated and not be riding on the bow, bow pulpit, deck, gunwale, or rear sun deck while underway.

- Do not allow your passengers to ride with their feet dangling over the side, floating debris can cause serious injury.
- Avoid excess weight in the bow or stern.
- Securely stow all extra gear in stowage areas to prevent load shifting. Do not stow gear on top of safety equipment; safety equipment must be quickly accessible.
- In adverse weather, reduce the load in the boat. People/load capacity ratings are based upon normal boating conditions.
- Do not use the engine unit as a boarding ramp. Make sure engine is off when swimmers, divers, and skiers are boarding to prevent injury.

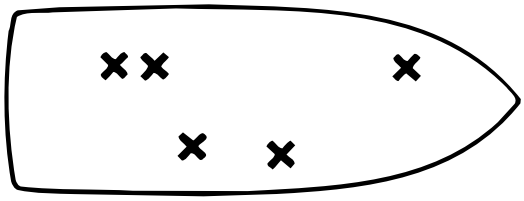

Proper Weight Distribution KC-1310

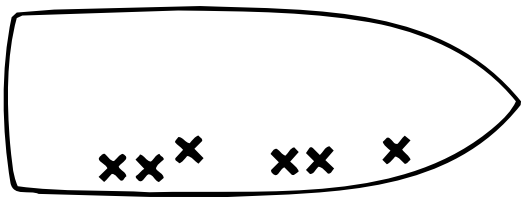

Improper (Starboard Heavy) KC-1340

Capacity

Boats up to 26' in the National Marine Manufacturers Association (NMMA) program have a maximum rated load capacity, which is stated on the certification plate (if equipped). The person/load capacity is determined by various USCG formulas. Actual capacity is determined by the availability of proper seating on the boat. Acceptable seating determines the number of passengers, not the overall load capacity.

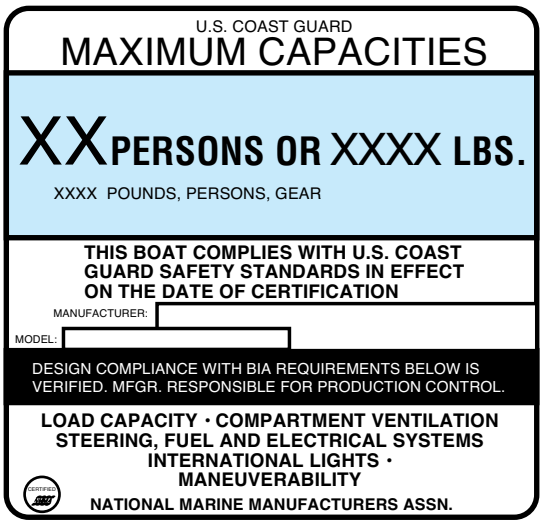

KC-1445

WARNING

Do not exceed the USCG certified maximum capacities under any circumstances. Overloading will reduce freeboard and increase the likelihood of swamping, especially in heavy seas. Overloading causes handling to become sluggish making it hard to react quickly.

Overpowering outboard powered craft is extremely dangerous. Overpowering will make the boat unstable and could cause loss of helm control. Failure to maintain control could result in severe injury or death.

6

RUNNING

We urge you and all others operating the boat to seek certified instruction from the local boating authorities.

This section is designed to present the most basic operational principles. It is NOT intended to cover all conditions encountered during operation. The principles presented in this manual are limited directly to the operation of the boat. The responsibility for the proper application of these principles belongs to you.

MANEUVERING TECHNIQUES

Steering response depends on three factors: engine's position, motion and throttle.

Like an automobile, high speed maneuvering is relatively easy and takes little practice to learn. Slow speed maneuvering, on the other hand, is far more difficult and requires time and practice to master.

When making tight maneuvers, it is important to understand the effects of turning. Since both thrust and steering are at the stern of the boat, the stern will push away from the direction of the turn. The bow follows a smaller turning circle than the stern.

The effects of unequal propeller thrust, wind, and current must also be kept in mind. While wind and current may not always be present, an experienced boater will use them to his advantage. Unequal thrust is an aspect shared by all single engine propeller-driven watercraft. A clockwise rotation propeller tends to cause the boat, steering in the straight ahead position, to drift to starboard when going forward, and to port when going backward. At high speed, this effect is usually unnoticed, but at slow speed; especially during backing, it can be powerful. For this reason, many veteran boaters approach the dock with the port side of the boat toward the dock, if possible.

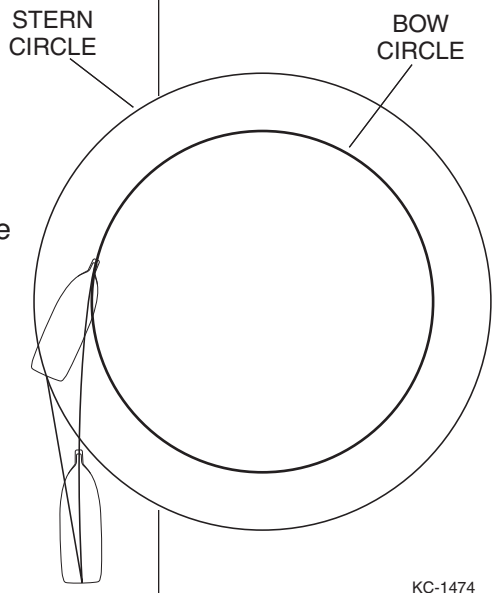

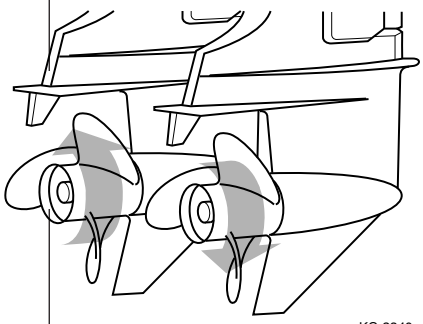

KC-2340

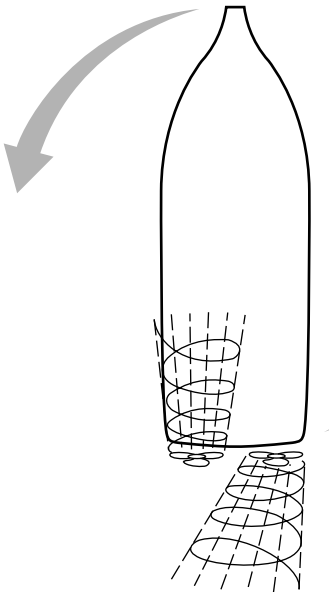

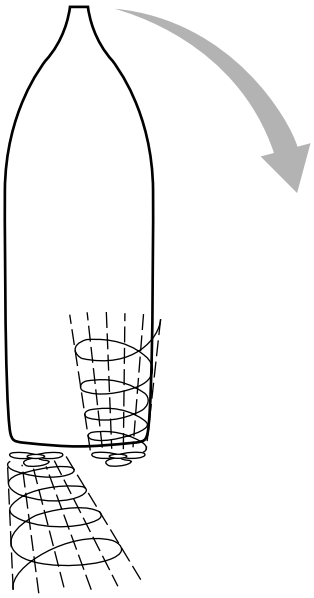

TWIN ENGINE MANEUVERING

Stopping

Twin-engine craft with counter-rotating engines operate with less propeller torque induced drifting, using the concept of counterrotation. One engine propeller turns clockwise while the other turns counterclockwise. This helps maintain an even keel by eliminating the tendency of your dual-powered boat to veer.

Stopping (checking headway) is a technique that must be developed. Since a boat has no brakes, reverse thrust is used to slow and stop the boat. The momentum of the boat will vary according to the load as well as the speed. Make it a practice to slow to idle (no-wake) speed before shifting into reverse.

Twin-Engine Maneuvering

One thing to keep in mind when maneuvering with twin-engine powered boats at low speeds, is that turns are made by thrusts of power from the engines and propeller, not by turning the outdrive unit; this means at lower speeds, steering your boat becomes a combination of propeller direction, engine thrusts, and steering wheel maneuvers.

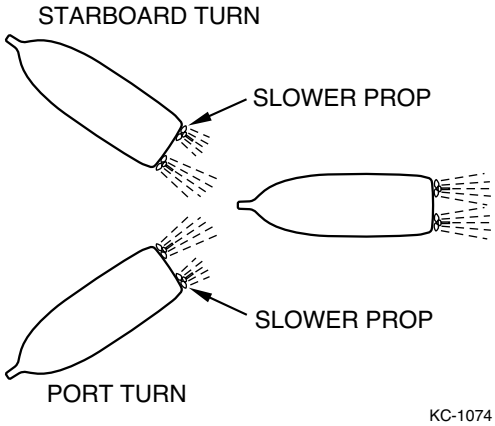

To make sharp and close quarter turns, observe the following:

- Before attempting to make close turns at low speed, bring the throttles to idle so you can shift into reverse without damaging the engine.
- Reverse the direction of the engine on the side you want to turn. For example, if you want to turn starboard, shift the starboard engine into reverse. The forward speed of the port engine, along with the reverse rotation of the starboard engine, will pivot your boat into a starboard turn.
- Practice using the throttles to control the boat. You should try these maneuvers in open water before attempting them near docks or other boats.
- Use quick “bursts” of throttle to control the boat. Keep in mind that once the boat starts to move, momentum will carry through.

It is best to learn maneuvering skills in open water away from traffic. Adequate practice is the only way to develop your boating skills.

SALT WATER

If boat is moored in salt water for long periods, tilt the engine out of the water (except during freezing temperatures). After removing the boat from the water, lower the engine to the run (down) position until the cooling system has drained thoroughly. Hose the entire hull down with fresh water and wipe dry.

Today's engines are built for operation in either fresh or salt water. Fresh water internal flushing is not normally required, however, it may be desirable after use in salt, polluted, or brackish water. Your dealer will assist you in securing the appropriate engine flushing device.

FREEZING TEMPERATURES

When the boat will be operated and left in the water and temperatures drop below freezing, the engine must remain in the tilted down (submerged) position at all times to prevent water in the engine from freezing. When the boat is removed from the water, drain the engine completely.

TOWING PROCEDURE

If seas are rough, it may not be easy to extend the tow line from one boat to another. In these cases, use a light throwing line with a weight on one end and with the heavier towing line secured to it.

Never attempt to tow a much larger or grounded vessel. Because of the tremendous stress caused by towing, use a tow line that is rated at least 4 times the gross weight of the boat being towed. Tow ropes must always be in good condition, free of any cuts or abrasions.

Attach tow line to the bow eye on the disabled boat. Attach the opposite end of the bridle only to the stern eyes of the tow boat. Wrap the bridle with chafing gear where it rubs against the boat or any corners. Leave at least 2 boat lengths between the boats for adequate movement.

⚠ DANGER ⚠

When towing, use only the bow and stern eyes; never use cleats, handrails, etc. Do not allow anyone to be in line with the tow rope. If the rope should break or pull free, a dangerous recoil could occur which may seriously injure or kill anyone in its path.

Adjust the tow line to match wave action. Keep the boats on the crest or in the trough of the waves at the same time. In protected, calm waters, shorten the line for better handling. Always tow at moderate speed, allowing for adverse wind and wave conditions. Have the operator of the towed boat steer with you if possible.

If you need a tow, or wish to tow another boat, use great care. The boat structure can be damaged by excessive pulling strain. You should always offer help to a boat in trouble. However, towing a capsized, grounded, or hull damaged boat is dangerous. Give assistance to the occupants; then call the proper authorities.

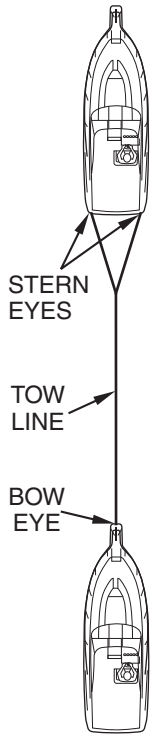

KC-2116

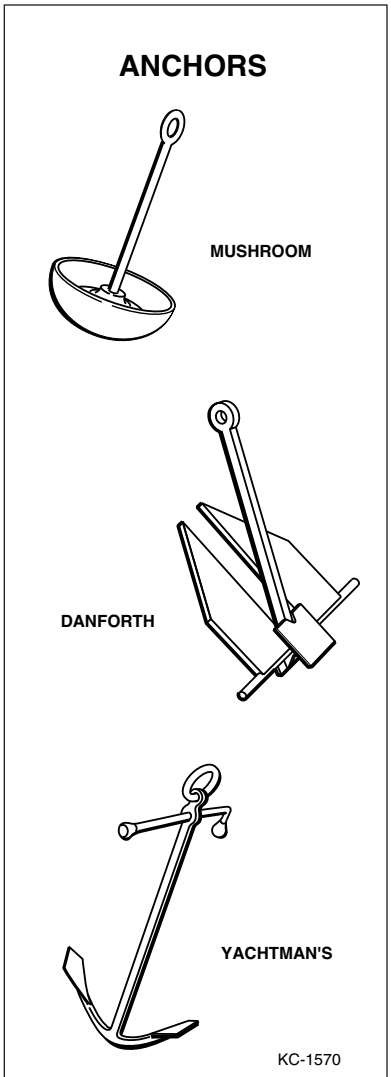

ANCHORING

Dropping Anchor

There are many types of anchors available on the market. The choice of one anchor over another depends on many factors. An anchor will usually hold best in a mixture of mud and clay or in hard sand. For more information on anchors consult your dealer.

⚠ WARNING ⚠

Always anchor from the bow; NEVER anchor from the stern. A small amount of current will make the boat unsteady…a strong current can pull a boat, anchored by the stern, under water and keep it there.

When anchoring, it is helpful to keep a few guidelines in mind.

- Make sure the line is tied to the anchor and tie the other end of the line to the forward cleat or bow eye.
- Head the boat into the wind or current over the spot where you want to lower the anchor.
- Stop the boat before lowering the anchor.
- When the anchor hits bottom, slowly back up the boat, keeping tension on the line. Let out an anchor line that is 6 to 7 times the depth of the water. For example, if you are in 10 feet of water, let out 60 to 70 feet of line.
- Secure anchor line to the bow cleat. Pull on line to make sure anchor is holding.
- Occasionally check your position against the shoreline. If the anchor is dragging and you are drifting, reset the anchor.

Weighing (Pulling In) Anchor

Start engine and move forward until anchor line is straight up and down. Pull hard to lift anchor from the bottom material (use wind).

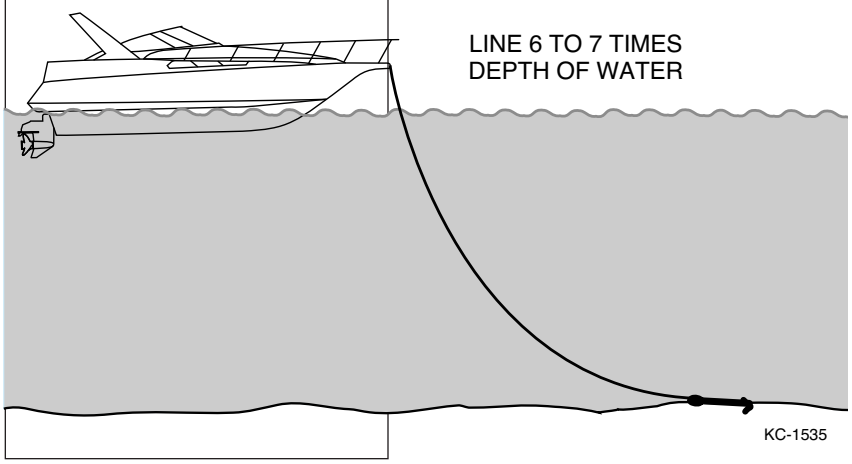

If the anchor is stuck, attach anchor line to the bow cleat so that it is taut. The up and down motion of the bow from wave action may lift the anchor from the bottom. If the anchor remains stuck, let out a few more feet of line and attach it to the bow cleat. Slowly maneuver the boat around the anchor until the anchor pulls loose. Be sure to keep the line tight during this procedure.

PERFORMANCE BOATING

Some boat models; especially those with high horsepower engines, are capable of impressive performance. Don't be tempted to push your boat to its limits until you are familiar with your boat's operating characteristics. The operator should have at least 10 hours of experience with the boat before any extended full throttle operation.

Operators must get used to the unique handling characteristics of performance operation; practice adjusting the throttle, trim and steering in an open body of water free of traffic. Never operate the boat when traffic is high or when conditions are rough.

Here are some guidelines for performance operation. Read them, practice them, and soon you will be operating your boat to its full capability.

Before Running

- Keep the bottom clean and free of scum, barnacles and other growth. Growth on the hull can slow the boat down considerably.
- Prepare the boat. Be sure all gear is properly stowed and compartments are latched.
- Weight distribution affects performance. Keep weight in the boat low and evenly distributed. Remove unnecessary weight and keep on shore.
- The propellers should be of the proper pitch to turn the recommended RPM rating for the engine and of the proper type for your average load and individual requirements. Your dealer can help you select a performance propeller.

When Underway

⚠ WARNING ⚠

Keep one hand on the wheel and the other on the throttle at all times. If the boat begins to operate in an unsafe way, pull back on the throttle and trim the engines IN at the same time. Failure to maintain control could result in severe injury or death.

- Raise trim tabs above the boat bottom
- Trim the engines out. Trimming the engine out at speed will cause the boat to rise up. The boat will begin accelerating without adjusting the throttles because less of the boat is dragging in the water. Steering will become easier because the propellers have less torque.

⚠ WARNING ⚠

Do not trim the engine out too far or the boat may begin to "porpoise" (bounce up and down). Porpoising lowers top speed and fuel efficiency, and reduces control and visibility. Failure to maintain control could result in severe injury or death.

- Watch the tachometer to keep the engines within the full throttle operating range. See the engine operator's manual for the proper tachometer reading at full throttle.

Performance operation on smooth water is very stable, but quick reactions and adjustments are needed to maintain control. Know your limits and stay within them. Always keep one hand on the steering wheel and the other on the throttles; constant adjustments are necessary for rapidly changing conditions. Depending on the speed, keep watch well ahead so that you may have enough time to react.

PROPELLERS

The propeller converts the engine's power into the thrust needed to propel the boat. Care and selection of your propeller is very important to proper boat operation. Propellers are identified by two numbers, such as 13 x 19, and a material identification, such as aluminum or stainless steel. In the number sequence, the first number is the diameter of the propeller and the second is the pitch.

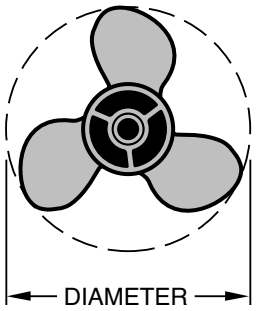

KC-1580

Pitch is the angle of the blades expressed in the theoretical distance a propeller travels in each revolution. In the above example, the pitch is 19, or each revolution of the propeller pushes the boat 19 inches through the water. A 19" pitch is considered "higher" pitched and a 15" propeller is considered "lower" pitched.

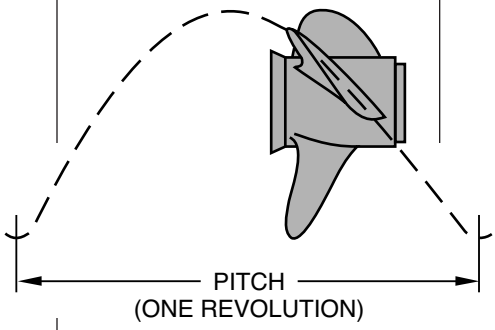

KC-1581

Keep these guidelines in mind when selecting a propeller:

- There are many different propeller designs for specific operating characteristics, including the number of blades, relief holes, cupping, etc. Do not attempt to change propellers until after you have a chance to determine your average load and individual requirements. Your dealer is best qualified to help you select a propeller.
- Engine RPM must be within the recommended operating range. Refer to the engine operator's manual.
- Higher propeller pitch reduces: RPM, acceleration, engine noise, and usually improves fuel economy and top speed.
- Lower propeller pitch increases: RPM, acceleration, engine noise, reduces fuel economy and top speed.

⚠ WARNING ⚠

Before installing or removing the propeller:

- **Put the remote control in the "NEUTRAL" position.**
- **Put the main switch in the "OFF" position and remove the key.**

Failure to observe this warning could result in severe injury.

A smaller pitch propeller should be selected for water skiing or for heavy loads. A smaller pitch propeller will develop more thrust for raising skiers quickly. When a skier has fallen, or a skier is not being towed, it is important that the operator watch the tachometer to make sure engine RPM does not continuously exceed the maximum full throttle RPM range.

WARNING

DO NOT use your hand to hold the propeller when loosening the nut. You could be injured. Put a wood block between the cavitation plate and the propeller blade to prevent the propeller from turning.

Problems associated with propellers include ventilation, cavitation, and blowout. These problems have similar symptoms and are best diagnosed by an expert. If you think you have a propeller related problem, consult your dealer.

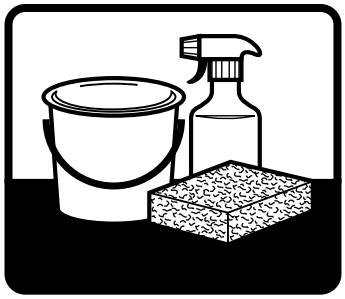

CARE AND MAINTENANCE 7

This section describes how to care and maintain your boat. It includes information about maintaining electrical components, corrosion protection, and general maintenance.

ELECTRICAL

Battery

The boat is equipped with a 12-volt direct current (12 VDC) negative ground electrical system. The positive (red) wire is hot and feeds current from the battery to the electrical systems. The negative (black) wire is ground and completes the circuit back to the battery. Until the engine is running at high idle or faster, all electrical power comes from the main battery. Once the engine is started and running above 1200 rpm, electrical power is then provided by the engine alternator. The alternator provides more power as engine speed is increased. When the engine is operating, the alternator is charging the battery.

Some models are equipped with a battery isolator that will automatically charge an accessory battery (such as a trolling motor battery) when the engine is running. The isolator automatically isolates each battery so that the lower charged battery will be charged first and the full battery cannot discharge to the drained battery. A battery selector switch may also be included for flexibility of use such as selecting either battery for starting, paralleling batteries, etc. Many different battery setups can be found; refer to Fish/Ski Features for more information.

⚠ WARNING ⚠

Batteries contain sulfuric acid which can cause severe burns. Wear protective clothing to avoid acid contact with skin, eyes, etc. Failure to observe this warning could result in severe injury.

Be sure to turn OFF battery charger and battery switch before servicing batteries. Check the battery frequently for signs of corrosion. If corrosion is evident, clean terminal posts with a baking soda and water solution and a wire brush. Before cleaning, remove the vent caps and seal the vent wells with corks to prevent the solution from getting inside the battery. Also, check the fluid levels in the cells. Usually, a level approximately 1/4 to 1/2 inch above the plates is sufficient. If needed, fill with distilled water; do not overfill! Some batteries are sealed, and cannot be filled.

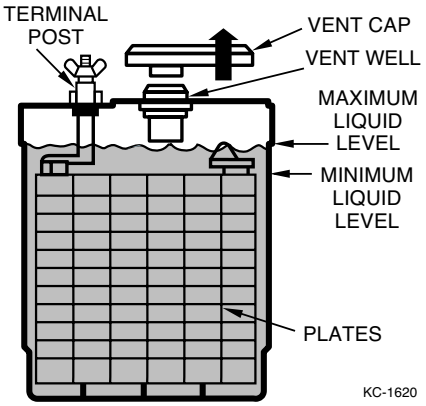

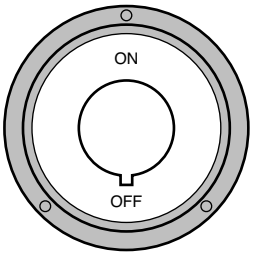

TYPICAL BATTERY SWITCH
KC-0704

Batteries are perishable products and will self-discharge. If you operate your boat sparingly, you may want to charge your battery occasionally (if not equipped with system battery charger). To recharge, remove the battery from the boat and remove the battery caps (when applicable). Recharge the battery according to the directions enclosed with your battery charger. When installing the battery in the boat, make sure the battery is secured in the battery box.

WARNING

Batteries produce explosive hydrogen gas. Never attempt starting your engine with jumper cables under any circumstances. Keep all sparks, flames and smoking materials away from batteries. Risk of spark at the battery post igniting gasoline or hydrogen fumes is too great. Always wear eye protection when near batteries and have adequate ventilation when charging. An explosion can cause blindness or other serious injuries.

Gelled Electrolyte Batteries

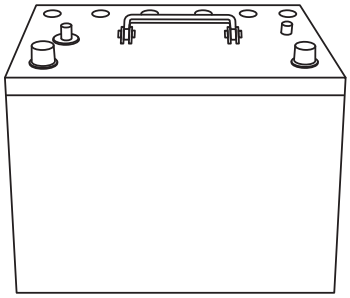

KC-1620A

Batteries using gelled electrolyte (Gel-Cell) technology are being used more frequently in the marine industry. Gelled electrolyte batteries offer reliable, maintenance free power. Gell-Cells are pressurized during manufacture and should never be opened. Gell-Cell batteries are designed for long life and have up to three times the cycle life of a traditional wet cell battery. Because of their low self-discharge,gelled electrolyte batteries are ready for operation over extended storage periods up to two years. Improper charging of a gelled electrolyte battery will cause damage and shorten its life. Follow the charging directions included with the battery and use only a good constant potential, voltage-regulated, charger.

Circuit Breakers and Fuses

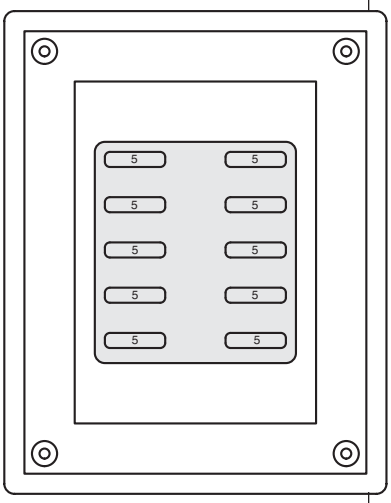

Typical ATC Series Fuse Block

All electrical circuits are protected from overload by the use of fuses or circuit breakers. In the event of an overload or short circuit, the fuse will blow or circuit breaker will trip. If a circuit continuously overloads under normal operating conditions, have your boat inspected by the dealer immediately.

WARNING

Never exceed the recommended fuse sizes or bypass the fuse safeguard. Always install the proper (type and rating) fuses whenever replacing or changing fuses. Continuous fuse/breaker failures indicate a severe problem that requires immediate attention. Failure to install correct fuse may result in damage to the electrical system or severe personal injury.

Some boat models have each individual circuit protected with a circuit breaker located next to the switch. To reset a tripped circuit breaker, switch OFF the circuit, wait about one minute for the breaker to cool, push the breaker button fully, and switch ON the circuit.

CAUTION

The electrical system is designed to protect you from short circuits and overload. Any modifications to the system, such as adding electrical accessories, should be done by a qualified technician.

Some installed accessories, such as the stereo, have an additional fuse located in the positive lead of the stereo. Some in-line fuse holders can be found near the battery.

FUEL SYSTEM

Fuel vents are normally located in the hull or transom below and in the same general area as the fuel fills. Check to see that the fuel fill and vent lines are free of obstructions and kinks. Be sure to check fuel filter periodically and clean as needed.

Fuel lines, vent hoses, and drain hoses should be checked frequently for leaks. Some models are equipped with removable inspection plates for fuel system component inspection. If a leak occurs around the fitting, then tightening of the hose clamps may be all that is necessary. However, if the leak continues, replace the hose immediately to prevent a build-up of fluids or gases. Surface cracking on the hose indicates wear, and replacement is recommended. Use fuel system parts certified for marine use only; do not substitute automotive parts in marine application.

STEERING SYSTEM

The steering system is the primary link for engine control and must be inspected and maintained regularly. The hardware at both the helm and engine end of the steering cable must be checked frequently for tightness. Refer to the engine operator's manual for the appropriate torques.

The steering bar must be lubricated monthly to ensure smooth operation. Turn the steering wheel to a full starboard turn to expose the bar. Use a high quality waterproof marine grease and fully coat the bar. Apply 2 - 4 shots of grease to fittings, if equipped. Turn the steering wheel back and forth to work the grease in.

Hydraulic and power-assisted systems must also be inspected. Make sure hydraulic hoses are tight and leak-free. Cylinder seals should be checked for dampness indicating leakage. Check the fluid reservoir monthly and top-off if necessary. Consult the steering system manufacturer's manual for more information.

CORROSION PROTECTION

Galvanic Corrosion

Galvanic corrosion (electrolysis), to the boater, is the break-up of metals due to the effects of electrolytic action. When two dissimilar metals are immersed in a conductive fluid (salt water), an electric current is produced, much like a battery. As the current flows, it takes with it tiny bits of the softer metal. If not stopped, a great deal of damage could occur.

TYPICAL IN-LINE FUSE HOLDER

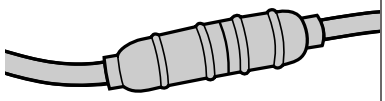

(TWIST AND PULL TO OPEN)

KC-1640

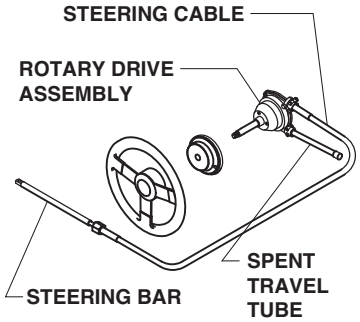

KCC 1884

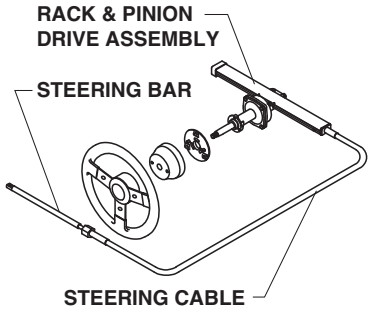

KCC 1886

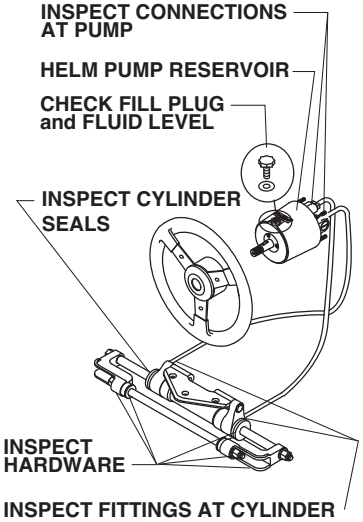

KCC 1888R2

If you operate in salt, polluted, or brackish waters, your boat should be equipped with a transom mounted zinc anode to prevent damage to those metal parts coming in contact with the water. The zinc is, by design, self-sacrificing. It is slowly eroded away by electrolytic action and requires periodic inspection for deterioration. If the zinc shows extreme erosion, it must be replaced to continue protection, or damage to other metal parts may result.

Most engines are equipped with one or more zinc anodes which must also be inspected regularly for deterioration. Some boat models may be equipped with an electronic cathode system. This system emits a low current electrical charge into the water close to the metal components. This charge cancels the effect of electrolysis.

CAUTION

Never paint or coat zinc anodes or cathodes with any substance. Once covered, they do not provide protection from galvanic corrosion. Replace anodes if they have deteriorated 50% or more.

Salt Water Corrosion

The entire boat should be rinsed with fresh water and washed immediately after use in salt water. If the boat is used primarily in salt water, wax the hull monthly and apply corrosion inhibitor to all hardware. See your dealer for products suitable for the marine salt water environment. Fresh water internal flushing is recommended when used in salt, polluted, or brackish waters. Flush the entire engine cooling system with fresh water for at least 5 minutes after use in these waters. See your dealer for appropriate flushing devices.

GENERAL MAINTENANCE

Marine Growth

If accelerated marine growth is a problem in your area, an anti-fouling bottom paint may be necessary to slow growth and prevent gelcoat damage. Before selecting a bottom paint, talk with other boaters and your dealer to determine which product works best in your area. Many local variables can affect the selection of paint. Be sure to follow the paint manufacturer’s directions exactly.

Cleaning

Periodic cleaning is the best way to keep your boat looking new. Regular washing and waxing keep dirt and scum from building up and deteriorating the finish. Keeping your boat in “show room” condition means greater personal satisfaction and higher resale value. Special cleaning products are available from your dealer to remove mildew.

Hull

Routine, periodic maintenance is the only practical way to keep the surface of your boat looking shiny and new. Boats left outdoors will gradually deteriorate from exposure to sunlight, water, dust and chemicals in the air. Outdoor exposure may cause your boat's surface to show a variety of changes, including:

- Chalking (fine, powdery whiteness on the surface)
- Fading (gradual loss of color)
- Yellowing
- Loss of gloss

Darker colors tend to exhibit these changes more rapidly than light colors because they absorb more of the sun's rays (ultraviolet and infrared).

Keep your boat covered when not in use. Use heavy duck or canvas (tarpaulin). **DO NOT** use sheet-plastic or other nonporous materials which can trap moisture between the cover and the boat's surface.

When washing the boat, be sure to use a mild detergent and warm water solution. **DO NOT** use abrasive cleaners, solvents, ammonia or chlorine as these will damage the gelcoat surface. Under extreme conditions, special cleaners may be used to remove marine growth, such as scum or algae, from the hull; see your dealer.

Waxing the entire gelcoat surface at least twice a season is recommended for all climates. Use of a specially formulated marine gelcoat wax will prevent color fade and soil and scum adhesion. If the gelcoat has chalked or faded from lack of proper maintenance, buffing may be necessary to bring back the shiny appearance. Hand buffing with #7 rubbing compound or power buffing with glazing compound #1 will quickly restore the surface.

Bottom Maintenance

The bottom of your boat must be kept clean! Any build-up of marine life from water will create drag and affect the boat's performance and efficiency. Never use wire brushes or scouring pads on the bottom of your boat, as this can cause small scratches that actually trap dirt.

Upholstery

Regular washing with mild detergent and warm water or automotive vinyl cleaners is sufficient to keep the cushions, canopy top, and vinyl coverings in good condition. Keep the cushions from becoming soaked and dry off thoroughly after washing to prevent mildew accumulation after the boat is covered. Prop the cushions up in the boat when covered to allow air circulation and spray with mildew repellent. Lubricate canopy top snaps with petroleum jelly.

CAUTION

Certain automotive, household and industrial cleaners can cause further damage and discoloration. Solvents and dry cleaning fluids, or products that contain dyes such as waxes, should be used with caution. Whenever cleaning stubborn stains, be sure to test the treatment in an unseen area first. The following stain treatments should be used with discretion. Between steps, be sure to rinse thoroughly with plenty of clean water and allow to dry.

Stain	Steps		
	1	2	3
Ballpoint Ink*	A	B	E
Chewing Gum	D	A	B
Coffee, Tea or Chocolate	B		
Crayon	D	B	
Eyeshadow	B		
Grease	D	B	E
Ketchup	A	B	
Latex Paint	A	B	E
Lipstick	A	B	
Mildew or Wet Leaves*	C	A	B
Motor Oil	B		
Paint, Oil Base (Dried)	D	A	B
Paint, Oil Base (Fresh)	D	B	E
Permanent Marker*	B	C	E
Shoe Polish*	D	B	E
Soil	A	B	
Spray Paint	B	E	
Suntan Lotion	A	B	E
Tar/Asphalt	D	A	B
Yellow Mustard	A	B	C

*These products contain certain dyes that stain permanently.

Treatment

A. Medium soft brush-warm soapy water.
B. Non-abrasive household spray cleaner.
C. One (1) tablespoon ammonia and one-fourth (1/4) cup hydrogen peroxide to three-fourth (3/4) cup water.
D. Wipe or scrape off excess. (Chill gum with ice.)
E. Follow instructions of staining agent manufacturer.

Carpet

Occasional washing with mild detergent and warm water or household carpet cleaners will keep the carpet clean. Thoroughly hose the detergent out of the carpet and into the bilge. This is usually the best time to clean the bilge. Let the carpet dry in the sun to prevent any mildew or odor caused by moisture.

Windshield

A clean windshield is important. The windshield requires special cleaning to prevent scratches to the surface. Use a mild soap solution and damp cloth only. Harsh detergents, solvents, chemicals or dry cloths will scratch the surface.

Bilge

Your bilge accumulates oil and greasy dirt over a period of time and should be cleaned out. Usually, ordinary soap and water does not remove the accumulation, and something stronger is necessary. Consult your dealer for recommendations on special bilge cleaning products.

Teak

Teak does not require refinishing, but should be cleaned occasionally with a teak cleaner, which can usually be found at a marine supply store. The best way to keep teak in top condition is to oil it regularly with teak oil, at least twice a year. Follow manufacturer's instructions and warnings carefully as some cleaners or oils may damage gelcoat, vinyl or aluminum. Avoid rust-producing steel wool pads when cleaning. Scotchbrite or similar nonmetallic pads are recommended.

CAUTION

Teak sealers can be harmful to other materials. Make sure you thoroughly remove any of this oil that has come in contact with the vinyls, gelcoats, etc. Teak should not be varnished as the natural oils will cause poor adhesion.

Interior Wood

Most interior wood is teak. If a scratch develops, it can be repaired easily using a fine grade sandpaper (400 to 1000 grit). Use a tack cloth to clean sanding residue, and then apply a small amount of lemon oil. Let dry and wipe with a soft cloth.

Plexiglass

Plexiglass is susceptible to scratching. When cleaning, always apply clean, lukewarm water and wipe with a soft, lint-free cloth. DO NOT use the following:

- Abrasive cleaners
- Solvents
- Glass cleaning solutions
- Acetone, benzene, gasoline
- Dry cleaning fluids
- Alcohol or carbon tetrachloride

Window Channels

A nylon pile is used in sliding window channels. NEVER use any products that contain bleaching solutions in this area. Use only mild detergent and water solution for cleaning. If windows stick, spray the channels with silicone spray while working the window back and forth.

Interior Fabric

Clean interior fabrics with dry cleaning fluid approved for use with soft fabrics. Follow the label instructions carefully. Be sure to test cleaners in an unseen area first.

CAUTION

Dry cleaners require adequate ventilation during use. Open all hatches and windows before application.

Use a soft cleanser to clean marks or stains on wallpaper; they will usually come off with soap and water. Lightly rub the mark or stain with a sponge or soft cloth and dry with a clean cloth.

Canvas

In most cases, boat canvas is subjected to more abuse than any other item on the boat. Canvas must be regularly maintained for long life and top performance.

Moisture, dirt and chemicals from industrial fallout, heat, ultraviolet rays and salt water can all contribute to the deterioration of canvas. These elements can cause serious damage if left unchecked. The following guidelines should help keep your canvas in good condition for years to come.

- The convertible top is not designed to withstand long periods of time exposed to the elements as a protective cover at dock side or when your boat is in storage. A full, properly fitted, light colored mooring cover should be used for these purposes.
- If canvas gets wet during use, remove side curtains and open windshield so seams can dry out. The air circulation will allow all canvas to dry and prevent the growth of mildew. **Never store folded or rolled up damp canvas.**
- Occasionally set up all canvas and curtains and hose down with fresh water to remove accumulated soot and dirt. Sweep or brush the underside of the canvas to prevent the accumulation of dirt and mildew.
- Wet canvas must be allowed to dry thoroughly before storage. DO NOT allow canvas to dry loose since shrinkage can occur. Erect all canvas fully on the boat when drying.
- Do not allow the canvas to be exposed to direct sunlight for long periods of time.
- Use care when handling clear vinyl curtains and windows to prevent scratching.

- Do not use cleaners on clear vinyl curtains and windows. Clean with plenty of clean water and a soft, clean cloth.
- Do not fold canvas parts. Loosely roll canvas to prevent damage.
- Do not store canvas in poly bags. Canvas should be kept in a well ventilated compartment.
- The outer canvas surfaces can be cleaned with a soft scrub brush and either automotive convertible top cleaners or household cleaners suitable for use on vinyl surfaces. The underside of the canvas may be periodically sprayed with a spray disinfectant to prevent the growth of mildew.
- Do not store or dock your boat under trees. Tree sap is very corrosive to canvas and can also be harmful to gelcoat and vinyl interiors.
- Adjust top bows to eliminate pockets in which rain water can accumulate. The weight of this accumulated water can collapse the top or bag the canvas.
- Snaps and zippers should be regularly lubricated. Vaseline, silicone spray, or paraffin are some of the lubricants that are effective. **Zippers should never be forced.**
- Never trailer your boat with the convertible top in the mounted position. All canvas should be dismantled, rolled, and securely stored while trailering your boat to prevent wind damage.

Stainless Steel and Chrome

Stainless steel and chrome plated parts are not totally resistant to corrosion. Occasional cleaning and polishing with a marine chrome and stainless polish will maintain and extend the useful life. In salt water areas, rinse all hardware with fresh water and apply a light coating of corrosion inhibitor oil to enhance appearance. Check hardware tightness at least once a season.

Bilge Pump(s)

Periodically check the bilge pump(s) inlet screens for debris. Foreign materials can clog the screen or become lodged in the bilge pump impeller, which can cause the pump to malfunction. Inspect all clamps and hoses for tightness on a regular basis.

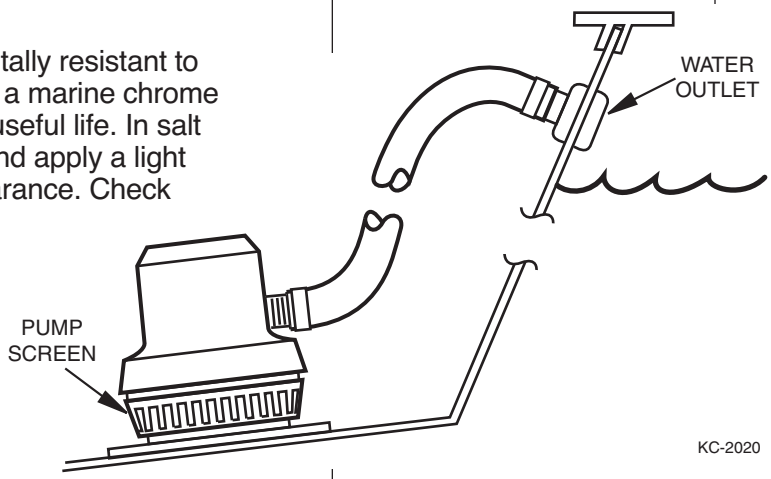

Toilet

Basic maintenance on the toilet involves the following:

- Use a nonabrasive cleaner for keeping the bowl clean.
- A light coating of a general purpose marine lubricant on the pump rods and slides will reduce friction of moving parts.
- Use recommended deodorant and lubricant for the internal parts of the head.

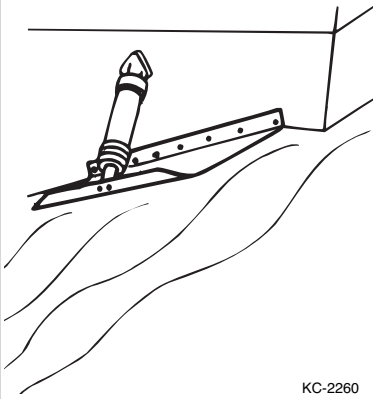

Detectors

The gas vapor detector and Carbon Monoxide (CO) detector require little maintenance. Consult the owner's manual for periodic testing procedures.

Trim Tabs

Inspect the trim tab pump periodically for fluid level. Fill with recommended fluid until full (if needed). Also inspect trim tabs for loose fasteners, leaking cylinders, and harness connections.

Alcohol Stoves

Carefully read and follow manufacturer's operating instructions supplied with your stove, and observe the following:

- Use only denatured alcohol labeled specifically for marine use.
- Do not operate the stove while underway.
- Do not fill stove near an open flame or hot object.
- All alcohol spilled should be wiped up prior to lighting the stove.

TROUBLE-SHOOTING

8

The following chart will assist you in finding and correcting minor mechanical and electrical problems. If an engine problem is indicated, consult your engine owner's manual.

Some problems may require specialized skill and tools to correct them; see your dealer.

TROUBLE CHECK CHART

Symptom	Possible Cause	Remedy
Engine will not crank	● Emergency safety switch not connected ● Throttle/shift control in gear ● Main circuit breaker open ● Battery terminals corroded ● Weak battery ● Battery switch in OFF position ● Faulty ignition switch ● Engine problem	● Connect Switch ● Place control in neutral ● Reset breakers ● Clean terminals and wiring ● Charge/replace battery ● Place switch ON ● Replace switch ● See your dealer
Engine cranks but will not start	● No fuel in tank ● Fuel filter clogged ● Fuel valves closed ● Contaminated fuel ● Engine problem	● Fill fuel tank ● Clean/replace filter ● Open fuel valve(s) ● Replace fuel - see your dealer ● See your dealer
Poor boat performance	● Contaminated fuel ● Uneven load distribution ● Engine trim wrong	● Replace fuel - see your dealer ● Adjust load/trim tabs ● Adjust engine trim

TROUBLESHOOTING

Symptom	Possible Cause	Remedy
Poor boat performance (cont.)	● Improper propeller selection ● Damaged or obstructed propeller ● Excessive water in bilge ● Engine problem	● Change propeller ● Check/change propeller ● Drain bilge ● See your dealer
Poor gas mileage	● Engine trim wrong ● Marine growth on hull ● Engine problem	● Adjust engine trim ● Clean hull ● See your dealer
Throttle/shifting problems	● Corroded cable ● Kink in cable ● Engine problem	● Clean/lubricate cable ● Replace cable - see your dealer ● See your dealer
Excessive vibration	● Damaged or obstructed propeller ● Engine problem	● Check/change propeller ● See your dealer
Electrical problems	● Blown fuse or open circuit ● Loose wiring connections ● Defective switch or gauge ● Defective component	● Replace fuse/repair open circuit ● Clean and tighten wiring ● Replace switch or gauge ● See your dealer
No power to AC outlets	● Ground fault circuit interrupter tripped ● Loose shore power cord ● AC breaker	● Reset GFIC ● Turn shore power OFF and reconnect cord ● Reset breaker
Sink/shower does not operate	● Fresh water pump circuit breaker is OFF ● Fresh water tank is empty ● Fresh water pump is defective	● Turn breaker ON ● Fill tank ● See your dealer
Toilet will not flush	● Toilet circuit breaker is OFF ● Weak or discharged battery ● Toilet seacock closed	● Turn breaker ON ● Charge/change battery ● Open seacock
Toilet will not empty	● Discharge valve closed ● Line to holding tank blocked	● Open valve ● See your dealer

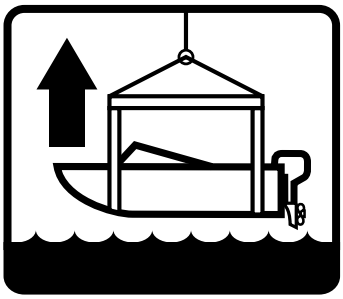

STORAGE

9

Storage or winter lay-up requires special preparation to prevent damage to the boat. Perform all annual maintenance at this time.

Without proper preparation, storage for long periods of time may cause internal parts of the engine and drive unit to rust because of lack of lubrication. Or, if the boat is stored in below freezing temperatures, water inside the bilge or cooling system may freeze causing damage. Damage to the boat due to improper storage will not be covered by the warranty. The following procedures should help prevent damage to your boat.

While The Boat Is Still In The Water

1. Fill fuel tank and add the proper amount of fuel stabilizer and conditioner according to the manufacturer's recommendations.
2. Operate boat for at least 15 minutes to be sure that treated fuel has reached engine.

Notice

If the boat is to be stored for more than 5 months, stored in a high moisture (humidity) environment, in temperature extremes, or stored outdoors, "fog" the engine with a rust preventative fogging oil according to the manufacturer's recommendations. See your dealer.

When The Boat Is Removed From The Water

Notice

Remove the bilge drain plug immediately after taking the boat out of the water. After washing, raise the bow of the boat high to allow as much water as possible to drain while performing other storage preparations.

- Flush the engine cooling system with clean water. DO NOT exceed 1500 rpm when flushing.
- Perform all scheduled maintenance. For stern drives, tuning the engine and changing the oil and fuel filters is especially important.
- Thoroughly clean the hull, deck and interior of the boat as soon as it is removed from the water. Cleaning at this time is easier because the marine growth is still wet. Be sure to allow for a couple of days of air drying to prevent mildew due to trapped moisture.

- Apply a coat of wax to the entire surface of the boat and rust inhibitor on all metal parts.
- Clean all traces of dirt, oil, grime, and grease from the engine and bilge. Touch-up areas of engine where paint has been removed.
- Prepare the engine for storage according to the instructions contained in the engine owner's manual.
- Store the bilge drain plug in a plastic bag and tape it to the throttle control lever so that it is easily found for reactivation.
- Remove the batteries from the boat. Clean, fully charge and store the batteries in an area not subject to freezing temperatures. Never store batteries close to heat, spark, or flame producing devices.
- Open all faucets and allow fresh water pump to empty water tank and intake lines. Run the pump dry for one or two minutes before turning it off.
- Open all drains, including the one on the water heater (if equipped).
- Empty holding tank for sanitary system, and flush with fresh water.
- Close inlet seacock. Remove inlet hose from pump housing and temporarily attach a short hose to the inlet. Pour one quart of nontoxic anti-freeze into container. With the open end of the temporary hose in the container, pump the head until the colored fluid runs down the rim of the bowl.
- Close outlet seacock.
- Remove strainer and seacock drain plugs to prevent damage from freezing. Close all seacocks.
- The boat bottom must be properly supported to prevent damage.

If stored on a trailer:

- Repack trailer wheel bearings with water resistant wheel bearing grease. If the trailer is equipped with bearing protectors, squirt grease into hubs with a grease gun.
- Park trailer and boat in a protected area. It is best to store boat on cradle. If the rig is left outside, install a boat cover. See your dealer.
- Loosen tie-downs and winch line but be sure the boat is resting properly on hull supports.
- Jack up trailer and place blocks under trailer frame to relieve weight on trailer tires and springs.
- Refer to engine and boat accessory manuals for further storage instructions.

Reactivating The Boat After Storage

- Charge and install batteries in boat.
- Check engine and bilge for signs of nesting animals; clean as necessary.
- Check entire engine for cracks and leaks caused by freeze damage.
- Check hose condition and all hose clamps for tightness.
- Install bilge drain plug.
- Open and close all seacocks to check operation. Install all drain plugs in strainers and seacocks.
- Open all faucets and fill fresh water holding tank with about 20 gallons of water. Turn fresh water pump on to allow water to flow through faucets before closing them. Pump will run until operating pressure is reached. Fill fresh water tank until full.
- Perform daily maintenance. If not performed during lay-up, perform annual maintenance.
- If the boat is equipped with the optional fresh water cooling system (stern drive only) and was drained for storage, fill the system with fresh coolant solution.
- Check and lubricate steering system.
- Remove blocks from under trailer frame.
- Tighten tie-downs and trailer winch line.
- Check tire pressure and lug nuts on trailer.
- Take the boat to the water and start it. It may take a minute of cranking to allow the fuel system to prime. Allow a one minute cool down period for every 15 seconds of cranking. When the engine starts, keep a close watch over the gauge readings and check for leakage and abnormal noises. Keep speeds low for the first 15 minutes until the engine has reached normal operating temperature.
- Refer to engine and boat accessory manuals for further reactivation instructions.

10 TRAILERING

This section provides information about trailering. It describes the hitch and safety chains, backing your trailer, preparing to launch, launching, and loading your trailer. Also included is a trailering checklist.

⚠ WARNING ⚠

- **The trailer must be matched for the boat's weight and hull.**
- **The towing vehicle must have the capability of pulling the load. Pulling a load that exceeds the vehicle's towing capacity may cause loss of control.**

Notice

Check the certification label on the left forward side of your trailer. The label is required to show the Gross Vehicle Weight Rating (GVWR), which is the load carrying capacity plus the weight of the trailer itself. Be sure that the total weight of your boat, engine, gear, and trailer do not exceed the GVWR.

Trailer laws on things such as lighting, registration, trailer brakes, gross vehicle weight, etc., vary widely from state to state. Contact your state Dept. of Motor Vehicles (and that of other states through which you may be traveling) for laws you must be in compliance.

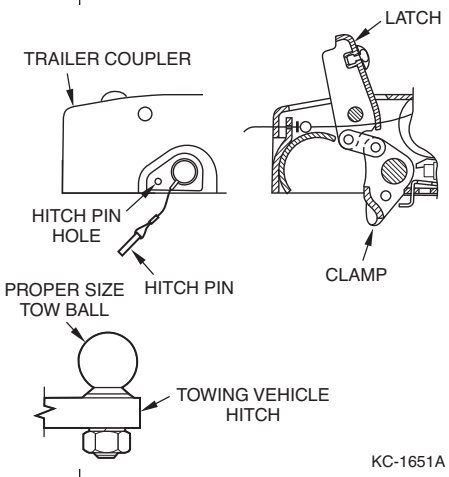

CLASSIFICATIONS

Trailers are separated into four classes based on gross vehicle weight (GVW). Gross vehicle weight is equal the trailers weight plus maximum load it may carry at 60 MPH.

- Class One GVW under 2000 lbs.
- Class Two GVW over 2000 under 3500 lbs.
- Class Three GVW over 3500 under 5000 lbs.
- Class Four GVW over 5000 lbs.

TRAILER COMPONENTS

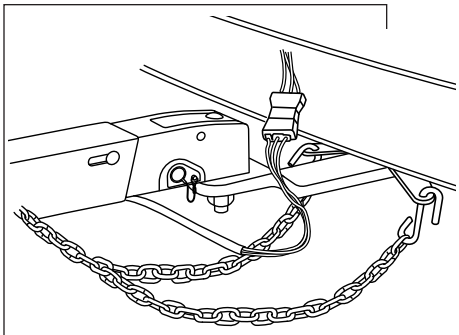

CRISSCROSS SAFETY CHAINS

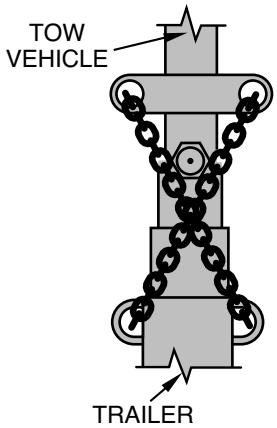

BOTTOM VIEW OF HITCH COUPLING

KC-1691A

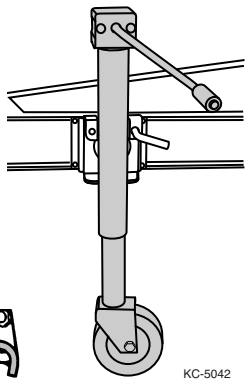

KC-5042

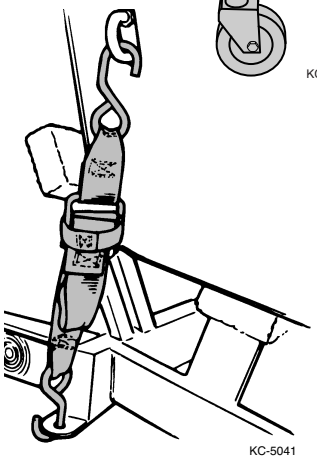

KC-5041

Hitch

Hitches are divided into classes that specify the gross trailer weight (GTW) and maximum tongue weight for each class. Always use a hitch with the same class number as the trailer, or greater.

Most boat trailers connect to a ball hitch that is bolted or welded to the towing vehicle. Special heavy-duty equalizing hitches are necessary for trailer tongue weights of 350 pounds or greater.

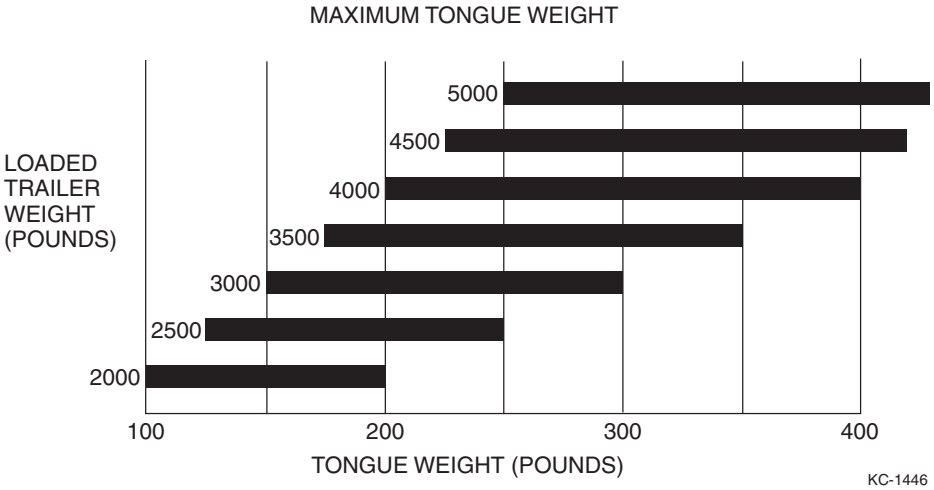

The trailer hitch coupler must match the size of the hitch ball. Never use a hitch ball that does not match the trailer coupler. The correct ball diameter is marked on the trailer coupler.

Safety Chains

Safety chains on your boat trailer provide added insurance that it will not become completely detached from the towing vehicle when underway.

Crisscross the chains under the trailer tongue to prevent the tongue from dropping to the road if the trailer separates from the hitch ball. Rig the chains as tight as possible with just enough slack to permit tight turns.

Make sure the proper chains are correctly attached between the towing vehicle and trailer before and during each trip.

Trailer Jack

Manufacturers recommend using the jack (if equipped) to lift the coupling of a loaded trailer from the hitch ball and for moving the trailer about when it is disconnected from the towing vehicle. The trailer jack should be lowered to a minimum position and tilted horizontally before towing the trailer.

Like any mechanical assembly, a jack requires maintenance to function properly over a long period of time. The drive gear and the rack and pinion should be greased. The caster and wheel bearing should be oiled frequently.

Tie-Downs

Ensuring that your boat is held securely in place on the trailer's hull support, especially when underway, is extremely important. If it is not firmly and properly secured, your boat can be damaged as it bounces against the hull supports.

Trailer Brakes

In some states, any trailer with a gross vehicle weight rating (GVWR) of 1,500 pounds or more is required to have brakes. Usually, this brake is a self-contained, hydraulic surge system, with either a drum or disk brake. Some trailer brake systems are electrically actuated and require a control box inside the towing vehicle. Consult your trailer manufacturer's owner's manual for more information on operation, adjustments and maintenance.

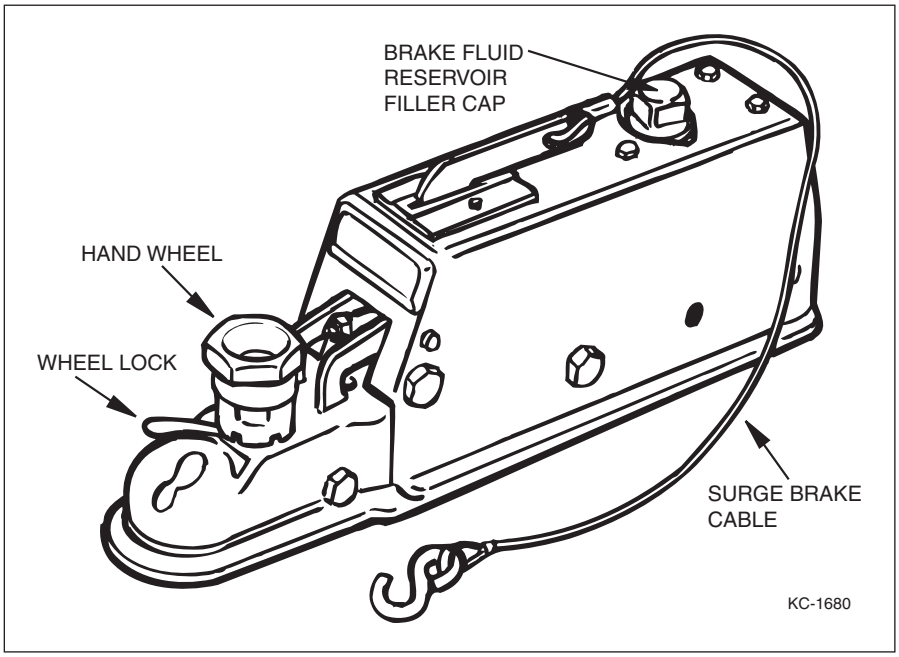

TRAILERING CHECKLIST

Below is a checklist to follow when trailering your boat:

- Consult your state laws as to brake and axle load requirements. Check brakes for proper operation and fluid level prior to departure on each trip.
- Check springs and undercarriage for loose parts.
- Check tires for proper inflation. Under-inflated tires heat up rapidly and tire damage or failure is likely to occur.
- Wheel bearings and lug nuts should be checked before each trip.

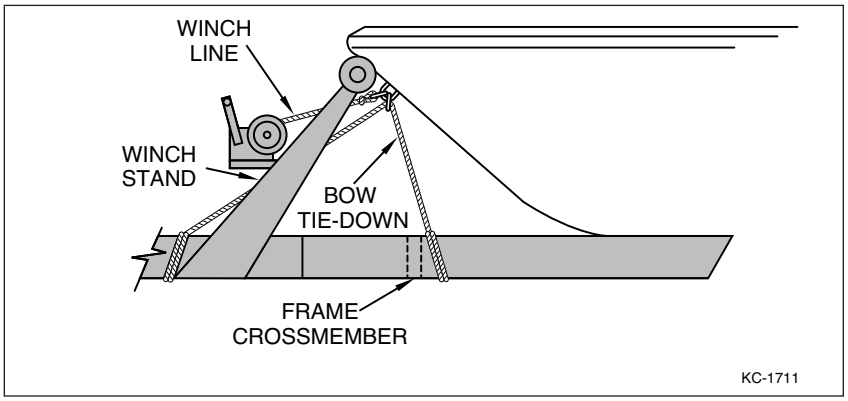

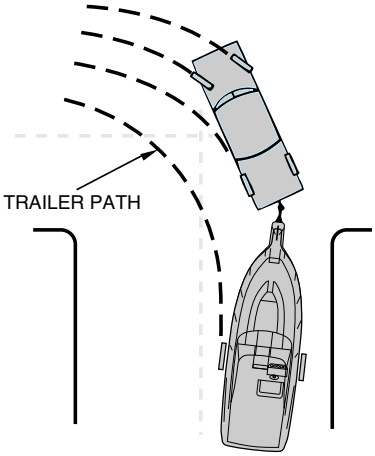

KC-1736

- Your boat should be fastened to the trailer by a line from the bow eye to the winch line PLUS a bow tie-down to the winch stand or trailer tongue. The stern of your boat should be tied down to the trailer from the stern eyes.
- Check to be sure the taillights and turning signals work prior to towing.
- Convertible tops are not designed to stay on boats at highway speeds. Before towing, take down the convertible top, side curtains, and back cover.
- Carry a spare tire for both your trailer and your towing vehicle along with sufficient tools to change them.
- Consult the engine operator's manual for engine related trailering precautions.
- On extended trips, carry spare wheel bearings, seals, and races.
- While traveling, check the wheel hubs every time you stop for gas or refreshments. If the hub feels abnormally hot, the bearing should be inspected before continuing your trip.
- When rounding turns on highways or streets, do not cut corners. Also, go slow over railroad tracks.
- Before backing your trailer into water, disconnect the light plug from the towing vehicle to reduce the likelihood of blowing out lights when they become submerged.

BACKING UP TRAILERS

If you have never towed a trailer before, take the time to practice backing your trailer before using it for the first time. Follow these guidelines when backing:

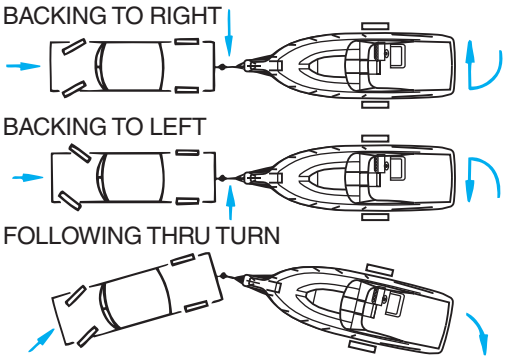

KC-1766

- Back slowly and make small steering adjustments.
- Turn the car wheels in the opposite direction you want the trailer to go.
- After the trailer begins moving, turn the car to follow it.
- Have a second person assist you with hand signals.

LAUNCHING

Before launching your boat, stay to one side and watch a couple of launchings to notice any problems on the ramp and the effects of the wind and current on launching. It is a common courtesy to prepare the boat for launching away from the ramp especially during busy periods. Perform the pre-launch sequence as follows:

1. Remove the boat cover, if equipped.
2. Check that bilge drain plug is in place.
3. Remove any additional trailering tie-downs from the boat.
4. Attach the bow and stern docking lines and fenders if necessary.
5. Disconnect the trailer lights from the car.

Launching with two people is recommended. Since all launches are different from each other in some way, the following procedure must be modified to fit the launch in use:

1. Back the boat down the ramp until the wheels are at least halfway submerged. Keep the trailer/car combination as straight as possible and at 90 degrees to the shore line.
2. Loosen and detach the bow strap from the bow eye.
3. Back the boat further down until the top of the fenders are about 2” above the water.
4. Board the boat and start it. If possible, remain on the trailer until the engine has warmed-up.

LOADING

Loading, like launching, is best done with two people:

1. Back the trailer into the water until the top of the fenders are about 3” above the water. Keep the trailer/car combination as straight as possible and, if possible, at 90 degrees to the shoreline. Set the parking brake securely.
2. Approach the trailer in a straight line from at least 5’ out. Use “bursts” of propeller thrust to move towards the trailer at the slowest steerable speed. Guide the boat onto the support bunks.
3. Check to see that the boat is centered on the support rails and is headed in a straight line for the bow stop (bumper board).

WARNING

Excessive throttle can cause the boat to travel over the bumper board causing extensive damage to the boat, trailer, and car and could cause severe personal injury.

4. Using a very light touch on the throttle, ease the boat forward until the bow comes to rest against the bow stop (bumper board).

CAUTION

The winch bow strap is merely a means of securing the boat to the trailer and is not intended to winch or pull the boat onto the trailer.

5. Attach and tighten the winch bow strap.
6. Pull the trailer up the ramp and attach any additional tie-downs and connect the trailer light harness.
7. Pull drain plug.
8. Perform end of day shut down procedures.

SLINGING/LIFTING

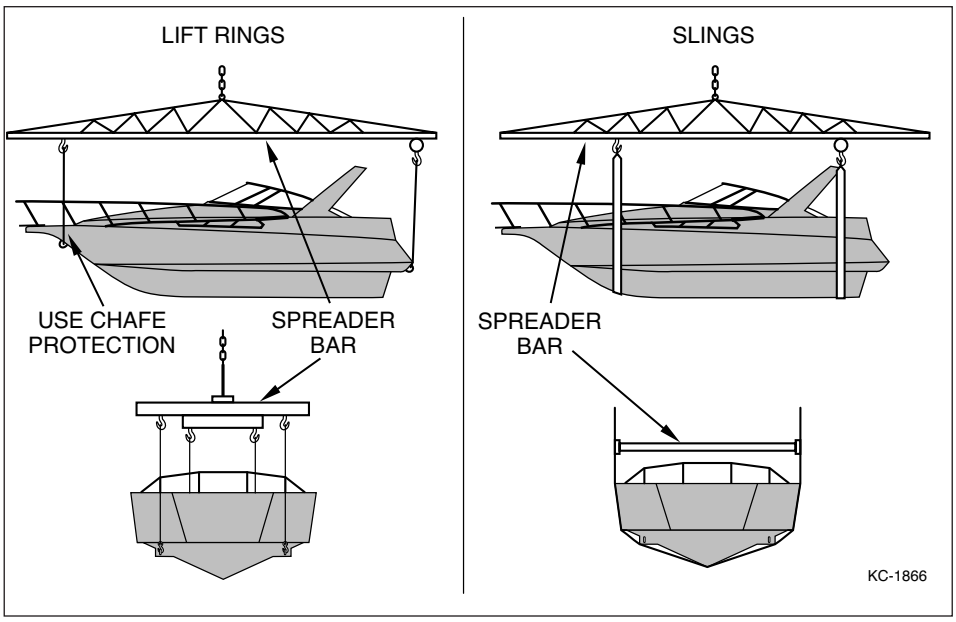

If the boat is to be removed from the water without a trailer, follow these guidelines:

- Never attach lifting cables to cleats, ski tow eyes or hand rails. Attach cables only to the lifting eyes in the transom and bow.
- Cover lifting cables with rubber hose or other protectors to prevent damage to the finish.
- Attach guide lines to the bow and stern to control movement.
- Use spreader bars and keep lifting pressure vertical to prevent side load damage.
- Keep the bow slightly higher than the stern to prevent engine damage.

SHIP SYSTEMS

11

Your boat is equipped with several systems for operation. This section describes the basic operational principles for the major systems. The procedures and illustrations in this section are typical and are intended to be representative of the system on your boat. Be sure to consult all system information provided with your boat before operation.

ELECTRICAL SYSTEMS

Some boats are equipped with two electrical systems; a battery powered direct current (DC) system, and a generator or shore powered alternating current (AC) system. These systems have a load center panel which serves as the main distribution panel.

The DC system supplies electricity to all of the boat's electrical circuits (lights, pumps, blowers, ignition, etc.)

The AC system supplies power to the electrical outlets, and to AC powered systems (electric stove, water heater, microwave, refrigerator, etc.) when the boat is moored to dock or slip.

DC Electrical System

WARNING

Considerable care has been taken to design a safe electrical system to protect you from hazardous shocks. Any modifications to the system should always be done by a qualified technician to protect you from hazardous shock.

Your boat has a 12 volt negative ground DC system. The positive wire is hot, and feeds current from the batteries to the various 12 volt systems, and the negative wire is the ground.

Many boats are equipped with three batteries. Two batteries (cranking batteries) are used only to start the engine(s). The third battery is an auxiliary battery that provides power to all of the other DC electrical circuits via the master battery switch.

While the engines are running, all batteries are charged by the engine alternator(s), and the rate of charge is controlled by an internal voltage regulator.

The electrical system is grounded by grounding the cranking batteries to the engine(s) and the auxiliary battery to the cranking batteries. The engine(s) are connected by ground cable to provide added assurance that a proper ground is being achieved. The engine(s) are then grounded to a bonding strip located in the engine compartment.

The auxiliary battery is separated from the cranking batteries by an electronic solid state isolator. When the engines and ignition switches are “OFF”, the isolator prevents accessory loads from depleting the cranking batteries. When the batteries are being charged by the alternator(s), the isolator automatically combines and isolates the alternator output and distributes the charge among the batteries according to individual need.

DC Master Panel

A typical DC master panel may consist of a voltmeter, a battery test switch, a series of switch type and resettable circuit breakers, and the master breaker switch.

Typical DC Control Panel

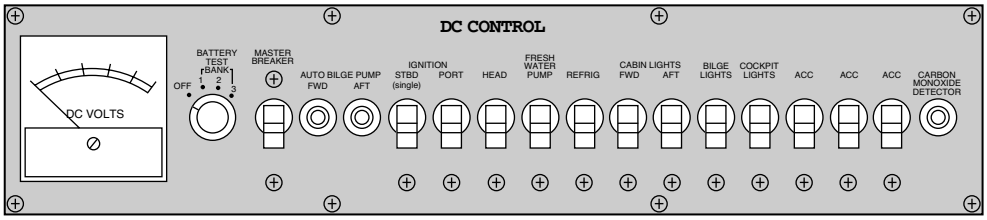

TYPICAL DC CONTROL PANEL KC-1633

The meter allows you to check on the condition of the batteries. With master breaker switch in the “OFF” position, turn battery test switch to:

- “1” to check the starboard engine cranking battery,
- “2” to check the port engine cranking battery,
- “3” to check the auxiliary battery, and
- “OFF” to disable meter and test circuit.

CAUTION

Never reset a breaker which has been automatically tripped without first detecting and correcting the cause of the problem.

The switch type circuit breakers’ function is twofold: they allow you to manually enable or interrupt a circuit by moving the switch on or off, and they protect the system receiving the DC current (power) by automatically opening the circuit if a short or overload condition occurs.

The resettable circuit breakers protect the system receiving DC power by automatically opening the circuit if a short or overload occurs.

AC Electrical System

Models equipped with shore power AC systems are rated for 125 volts at 60 cycles. Source current can be provided from a 110 volt, 60 cycle shore power station.

The AC system in your boat is much like the system in your home. The hot wire (usually black) sends current to the AC system. The neutral wire (always white) sends current back to the source, and the ground wire (always green) grounds all systems to a common ground. In your boat the common ground is the copper bonding strip located in the engine compartment.

WARNING

Considerable care has been taken to design a safe electrical system to protect you from hazardous shocks. Any modifications to the system should always be done by a qualified technician to protect you from hazardous shock.

Typical AC Generator Control Panel

Many AC control panels consist of a voltmeter or main AC breaker, a reversed polarity indicator light, and individual circuit breakers.

Voltage Meter – Allows you to monitor the AC voltage. Damage to components can occur if voltage entering your system is less then 105 volts. Do not use AC powered equipment if you get a reading of 105 volts or less.

Reversed Polarity Light – Indicates if the polarity of the **shoreside power source** has been reversed, but will not indicate if the boat polarity (wiring) is reversed.

WARNING

Every effort has been made at the factory to assure proper wiring polarity for the boat AC system. Any modification performed on the boat AC system must be made by a qualified marine technician and checked to assure compliance with ABYC guidelines and National Electrical Codes.

Power Available Light – Indicates that power from the shore or from the generator is available to the panel for distribution. This indicator must be illuminated before switching the main AC breaker “ON.”

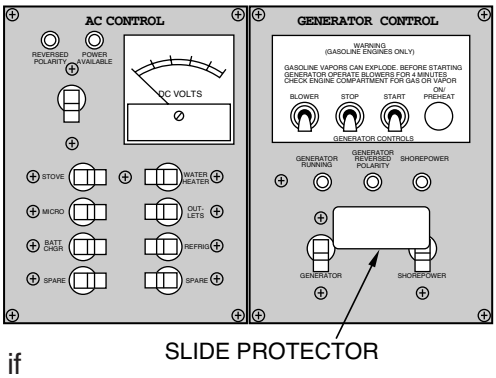

TYPICAL AC CONTROL PANEL

KC-1634

WARNING

If a reversed polarity warning is indicated, DO NOT USE the shore power source. Immediately turn off the power source on shore and disconnect the shore power cord. Reversed polarity is a dangerous and potentially lethal condition which may cause shock, electrocution, or death.

Main AC Breaker – Switches the entire AC system "ON" and "OFF." This allows you to check for proper voltage and polarity immediately after shore power cord connection has been made, before individual circuits are enabled.

Individual Circuit Breakers – Allow you to manually enable or interrupt a circuit by flipping the switch "ON" or "OFF," and they also protect the system receiving the AC load by automatically breaking the circuit in cases of shorts or overloads.

CAUTION

Never reset a breaker which has been automatically tripped, without first discovery and remedying the cause of the problem.

If your boat is equipped with a generator, the Generator Control panel contains the starting/stopping controls for the generator as well as the controls for switching between Shore Power and Generator.

Notice

Read the generator owner's manual before operating the generator for the first time. The manual contains important operation and maintenance information.

Whenever operating the generator, you must first operate the engine compartment blower for at least 4 minutes prior to starting, and continuously during generator operation to remove dangerous gas or vapor.

WARNING

The blower must be operated for a minimum of four minutes before each time the engine is started. In addition, the blower should be operated continuously when at idle or slow speed running. Failure to operate the blower can cause an explosion.

Notice

Models equipped with a diesel engine powered generator may have a PREHEAT switch used during starting.

Notice

Some models may be equipped with extra batteries and a DC to AC converter. The converter will allow certain AC appliances, such as a refrigerator, to operate from battery power while underway. The operation of battery conversion systems is not discussed in this manual.

Since boats equipped with shore power usually remain in the water for extended periods, corrosion is the primary cause of AC electrical problems. Corroded connections can overheat plugs and receptacles and is usually first noticed at the plug. If signs of overheating is evident, repairs must be made immediately before further damage is done.

Shore Power Connection

One or two 125 volt receptacles are provided for shore power inlet. The type of receptacle determines the amperage rating of the system. Four amperages may be found; 15 ampere, 30 ampere, 50 ampere 125V and 50 ampere 125/250V.

A 15 ampere shore cord could be viewed as an extension cord for the boat. Fifteen ampere systems usually supply one device such as a battery charger, and have no AC control panel or individual branch circuits.

The 30 and 50 ampere systems are equipped with an AC control panel for power distribution to branch circuits.

All shore power systems require a special, marine grade three-conductor cable to make a proper connection to the shore. Dockside connections are plug-in while boat side connections plug-in and are locked in position with a threaded locking collar to prevent accidental disconnection and enhance water resistance. If the proper receptacle is not available at dock side, there are special adapters available to connect to 50 ampere systems. Consult your dealer for information on proper adapters.

Some boats may be equipped with two separate 30 ampere electrical systems (with separate AC Control Panels) or may use two 125V shore power cords to provide 250V service (in which case the AC Control Panel will combine service automatically for large appliances).

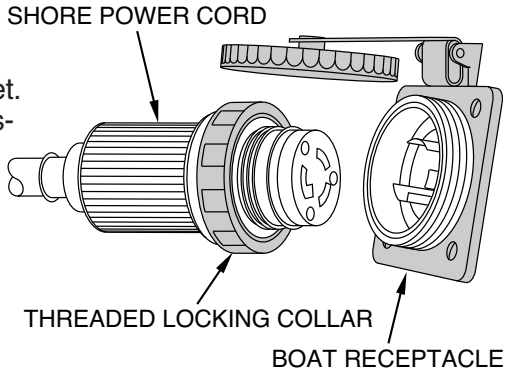

BOAT SIDE SHORE POWER CONNECTION

KC-2053

WARNING

Plugs and receptacles for different systems are designed in noninterchangeable configurations. A plug from one system cannot fit into the receptacle of another system. Never attempt to modify a shore power cable; use only commercially available adapters for system modification.

To minimize shock and fire hazards when connecting and disconnecting shore cord:

To connect:

1. Turn “OFF” the boat’s main AC breaker switch.
2. If the outlet on the pier has a disconnect switch, turn the switch in the “OFF” position.
3. Connect shore power cable at the boat first.
4. Make sure the cable has more slack than the mooring lines.
5. Remove the cap from the outlet on the pier. Connect the other end of shore cable to the outlet on the pier.
6. If polarity warning indicator is activated, immediately disconnect cable.
7. Set the shore disconnect switch in the “ON” position.

To disconnect:

1. Set the 110 volt AC MAIN switch in the “OFF” position.
2. If there is a disconnect switch on the shore, set the disconnect switch in the “OFF” position.
3. Disconnect shore power cable at shore outlet first.
4. Disconnect the power cable from the inlet in the boat. Replace the cap over the inlet.
5. Place cable in storage for future use.

WARNING

Some marinas have been known to “break” shore power ground circuits to prevent electrolysis. Opening the ground circuit creates a potentially dangerous on board shock hazard. Ensure that your shore power cable ground circuit is always continuous.

Generator Breaker – Makes or breaks the connection between the generator and the AC control panel. DO NOT switch while the generator is operating.

Shore Power Breaker – Makes or breaks the connection between shore power and the AC control panel. DO NOT switch while shore power is being used.

Generator Running Light – Indicates that generator power is being received by the AC control panel.

Reversed Polarity Light – Indicates if the polarity of the generator output (wiring) has been reversed.

WARNING

If a reversed polarity warning is indicated, DO NOT USE the generator. Immediately turn off the generator and determine the source of the problem. Reversed polarity is a dangerous and potentially lethal condition which may cause shock, electrocution, or death.

Shore Power Light – Indicates that shore power is being received by the AC control panel.

To Operate From Shore Power

1. Shut down generator if applicable. If equipped, Generator Running indicator will go out.
2. Turn “OFF” generator breaker and main AC breaker. If equipped, Power Available indicator will go out.
3. If so equipped, move the slide protector over the Generator breaker.
4. Flip the Shore Power breaker to the “ON” position. The Power Available indicator should illuminate.
5. Flip the Main AC breaker to the “ON” position. If the Reversed Polarity light illuminates, flip the breaker “OFF” immediately.

WARNING

If a reversed polarity warning is indicated, DO NOT USE the shore power source. Immediately turn off the power source on shore and disconnect the shore power cord. Reversed polarity is a dangerous and potentially lethal condition which may cause shock, electrocution, or death.

6. Flip individual circuit breakers “ON” as required.

To Operate From Generator Power

1. Shut down shore power if applicable. If equipped, Shore Power indicator will go out.
2. Turn “OFF” shore power breaker and main AC breaker. If equipped, Power Available indicator will go out.
3. If so equipped, move the slide protector over the Shore Power breaker.
4. Flip the Generator breaker to the “ON” position. The Power Available indicator should illuminate.
5. Flip the Main AC breaker to the “ON” position. If the Generator Reversed Polarity light illuminates, flip the breaker “OFF” immediately.

WARNING

If a reversed polarity warning is indicated, DO NOT USE the generator power source. Immediately turn off the power source. Reversed polarity is a dangerous and potentially lethal condition which may cause shock, electrocution, or death.

6. Flip individual circuit breakers “ON” as required.

WATER SYSTEMS

Some boat models may be equipped with two or more water systems; a fresh water system, a raw water system, and a head and waste containment system.

The fresh water system provides potable (drinkable) water to items such as sinks, showers, hot water heater, ice makers, or cockpit washdowns.

The raw water system provides outside (that which the boat is on) water to items such as cockpit washdowns, heads (marine toilets), and engines.

The head and waste containment system provides outside (raw) water to the head.

Fresh Water System

Two types of fresh water systems are common; a manual system and a pressurized system. Manual systems consist of a storage tank and a hand pump/faucet.

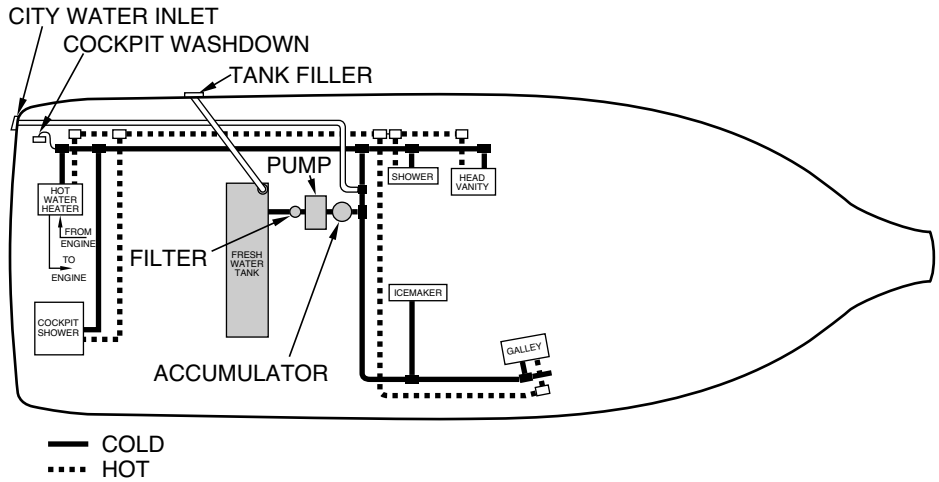

TYPICAL COMPLEX FRESHWATER SYSTEM KC-2040

Pressurized systems can range from the simple type consisting of a storage tank, electric pump and faucet, to the complex type consisting of a storage tank, filter, electric pump, accumulator, city water hookup, water heater, and any one of a number of showers, sinks, or other items which require potable water.

Notice

All fresh water drainage is directed overboard.

Fresh Water Tank

The boat is fitted with a fresh water tank that is filled through the deck plate filler marked “WATER.” The tank is vented through the hull, this allows air to enter/escape as water levels rise and fall. The water tank is full when water comes out of the vent.

Notice

Fill the tank only with potable water. Using and refilling the tank often will help keep it a source of clean drinking water.

TYPICAL DECK PLATE KEY

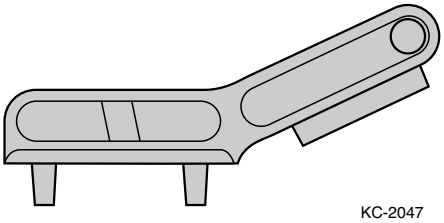

KC-2047

To fill the tank:

1. Insert the filler cap (special) key provided with your boat.
2. Insert the key into the slot in the cap and turn counterclockwise to unlock.
3. Remove the cap.
4. Using a sanitary drinking water hose (blue), fill the tank with clean, fresh drinking water.
5. Replace the cap and lock into position with the key.

Filter, Pump, and Pressure Accumulator

Water is drawn from the tank by a self-priming pump located to port and below the engine hatch. Before entering the pump, the water passes through a filter to capture any contaminants. The pump provides a flow of water at a preset pressure to the remainder of the system. Should the system develop a leak or become empty, a dry tank shut down switch prevents pump burnout.

A pressure accumulator tank provides a smooth surge free flow of water from the pump to various fresh water systems. The pressure accumulator also reduces the need for excessive pump cycling by maintaining a constant pressure in the lines.

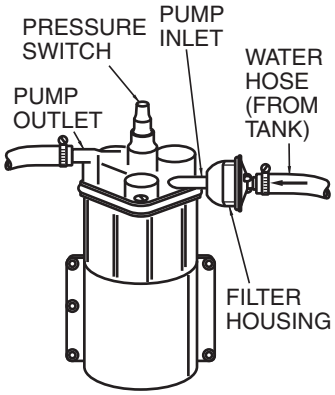

TYPICAL FRESHWATER PUMP

KC-2042.1

Initial Fresh Water System Startup

1. Fill the fresh water tank with approximately 20 gallons of potable water.
2. Turn the FRESH WATER PUMP breaker “ON.”
3. Open the cold water galley faucet to allow air to escape. Close the faucet when a steady flow of water is apparent.
4. Open the hot water galley faucet to fill the water heater and allow air to escape from the line. Close the faucet when a steady flow of water is apparent.
5. Bleed air from the remainder of the faucets, showers, etc., in the same manner as steps 3 and 4. After all lines have been bled, the pump will build to operating pressure and then shut off.
6. You may now continue to fill the tank to its capacity.

CAUTION

The fresh water pump works on demand and WILL NOT automatically shut-off when the tank is empty. If the breaker switch is in the “ON” position, and the tank is empty, the pump will run continuously and may overheat.

City Water Hookup

CAUTION

Monitor the water system during initial usage of the "city water" feature. In this mode, the boat is connected to an unlimited source of water. NEVER leave boat unattended while using the "city water" feature. Any major leak or break in the system will allow abnormal bilge accumulation which in turn could cause sinking or swamping of batteries and engine.

As an alternative to the fresh water tank, the fresh water system can be connected to "city water." Because the water enters the boat under pressure, it bypasses the tank, the filter, the pump, and the pressure accumulator. Also, since city water pressure can sometimes be higher than the boat system was designed for, your water inlet may be equipped with a pressure regulator that limits the maximum pressure to 35 psi.

Notice

Using "city water" hookup does not replenish water supply in the tank. The tank can only be filled at the fresh water fill plate.

WARNING

Before connecting to any water fitting (dockside or otherwise), be sure the water is potable and suitable for human consumption. Also, a special sanitary drinking water hose is required for the potable water connection. Never use common garden hose for drinking water.

To connect city water:

1. Turn the FRESHWATER PUMP breaker "OFF."
2. Remove the threaded plug from the female swivel hose connector of the water inlet fitting. Clean any particles from the strainer.
3. Attach the proper sanitary drinking water hose to the water inlet fitting. Be sure to clean both ends and flush the hose before connecting. Foreign matter may damage the pressure regulator.
4. Before connecting to the dockside city water outlet, open the valve fully to flush any rust particles that may be present.
5. Connect the hose to the dockside city water outlet.

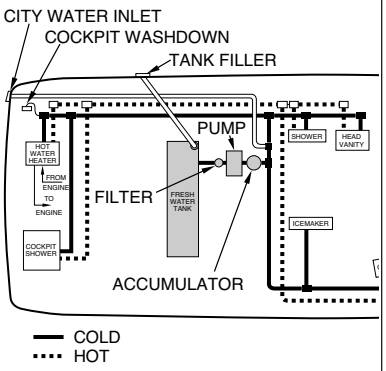

TYPICAL FRESHWATER SYSTEM

HOT WATER HEATER

The hot water tank is equipped with a high pressure relief valve for safety. Some models may have a thermostat that regulates the heater to a specific water temperature. The thermostat is adjustable to suit individual taste. The electric hot water heater is operated by turning “ON” the WATER HEATER breaker switch located on the AC panel.

The hot water tank also operates via a heat exchanger. Heated cooling water from the engines is delivered to a heat exchanger which in turn heats the water in the hot water tank.

CAUTION

Do not turn the hot water switch on unless the fresh water system is charged. Damage to the heating element will result if allowed to heat up with no water in the system.

To use the hot water heater:

1. With fresh water tank filled and pump “ON” or city water connection operating, turn HOT WATER HEATER breaker “ON.”
2. Turn on one of the hot water faucets to purge any remaining air from the hot water system.

Notice

Some hot water heaters are equipped with a high temperature limit switch to protect the heating elements should the heater be activated without water in the tank. If for any reason the system does not operate, turn the hot water heater breaker “OFF” and push the reset button on the heater.

Fresh Water System Maintenance

The following maintenance actions should be performed monthly to keep the fresh water system clean and sanitary:

- Drain the fresh water tank completely (using all faucets, showers, etc.). Refill tank with at least 20 gallons of clean, fresh water and drain again.
- Clean fresh water pump inlet filter screen (if equipped).
- Replace fresh water system filter(s) (if equipped).
- Clean city water inlet strainer (if equipped).
- Flush city water system (using all faucets, showers, etc.).

SANITIZING THE FRESH WATER SYSTEM

If water in the tank has been allowed to stagnate and you suspect that the fresh water system may be contaminated, sanitize the system. To sanitize:

1. Drain the fresh water tank completely (using all faucets, showers, etc.).
2. Mix a solution of 1/4 cup household bleach to 1 gallon of water for every 15 gallons of tank capacity. Pour the solution into the fresh water tank.
3. Fill the tank with clean, fresh water.
4. Turn fresh water pump “ON” and bleed air from all faucets, showers, etc.
5. After approximately 3 hours, drain the system completely.
6. Flush the system with one full tank of water.
7. Fill tank with clean, fresh drinking water.

If you can smell or taste bleach in the water:

1. Drain the system completely.
2. Mix a solution of one quart of white vinegar to 5 gallons of water. Pour the solution into the fresh water tank.
3. Allow the solution to remain in the tank until approximately one hour of cruising time is logged.

Notice

Boat motion will “slosh” the vinegar/water solution to help clean the tank.

4. Allow the solution to remain in the tank for at least one week.
5. Drain the fresh water system completely.
6. Flush the system with one full tank of water.
7. Fill the tank with clean, fresh drinking water.

Raw Water System

Boats may contain several raw water systems. Essentially, any component that requires outside water such as the engines, head, or cockpit washdown will each have its own raw water intake.

All raw water systems have three things in common; each will have its own thru-hull raw water intake, a seacock and a strainer. The seacock is very important as it protects a boat from sinking if a downstream hose or fitting should fail. It is therefore very important to close any seacock not in use.

All raw water systems have some type of pump to draw water into the boat. Engines have pulley driven pumps; heads may have manual push/pull or electric pumps; cockpit washdowns have electric pumps. Some raw water systems may supply two components and will have a flow control valve for directing water flow.

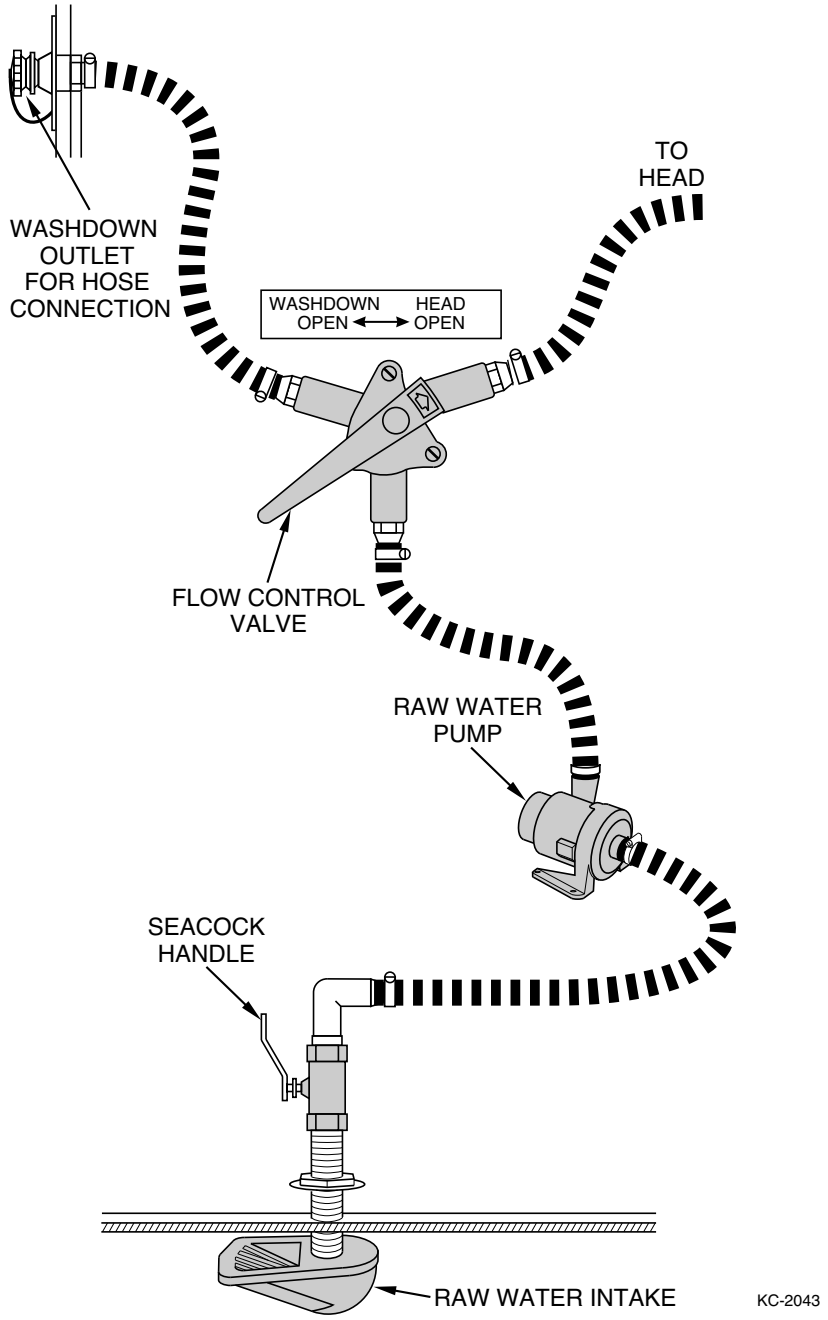

To operate a raw water system:

1. Open seacock.
2. Adjust flow control valve (if equipped).
3. Turn appropriate pump switch “ON” if necessary.

Head and Waste Containment System

Some boats are equipped with a head (marine toilet) and waste containment system. The head has either the manually operated system, or the electrically operated system, which draws seawater in through the hull to flush waste water from the marine toilet. The toilet pumps the waste water on to a holding tank.

Waste Holding Tank

The boat is fitted with a waste holding tank that is emptied through the deck plate fitting marked “WASTE.” Waste is pumped from the head through a sanitary waste hose to the top portion of the tank. A 3/4" sanitary waste hose is attached to the bottom of the tank, and runs to the dockside pumpout plate. An overboard vent keeps the tank at atmospheric pressure regardless of waste levels.

All the components which comprise the waste system are made of materials specially formulated to prevent odor permeation and to resist chemical actions. It is strongly recommended that you regularly add chemical to your tank by flushing it through the head. The chemical helps to control odor and break down the waste. Follow the manufacturer’s instructions on the chemical before using.

Depending on the model, there are 3 basic waste system configurations; dockside pumpout, pumpout and overboard discharge, and pumpout, discharge and macerator.

CAUTION

Do not flush into a full holding tank. Attempting to flush the head when the tank is full could result in damage to the waste system.

A waste tank indicator may be installed to provide a visual indication of the amount of waste in the tank.

Waste Disposal

DOCKSIDE PUMPOUT

This system directs all waste to the holding tank. To clear the tank of waste water, you will need to use the dockside pumpout services provided at marinas, etc.

To empty the tank of waste, hook a suction hose to the pumpout plate and to the dockside pump. The marina will handle the proper disposal of the waste and may charge for this service.

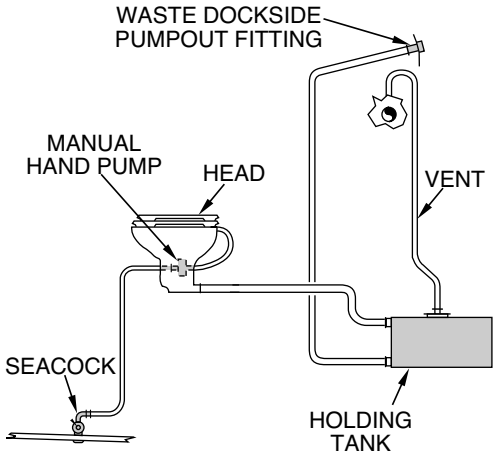

TYPICAL DOCK PUMPOUT SYSTEM

KC-2044

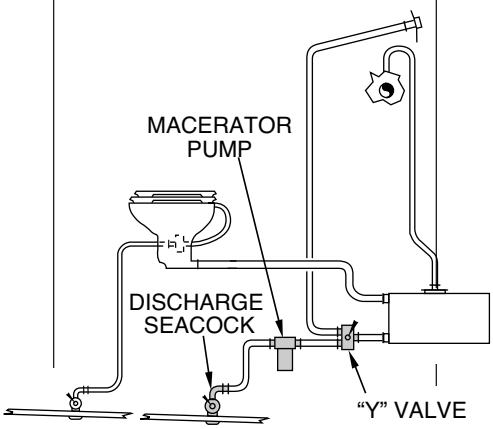

TYPICAL MACERATOR SYSTEM

KC-2046

Macerator Pump

A "Y" valve is installed between the pumpout plate and the macerator discharge seacock. The macerator pump is located between the "Y" valve and the macerator discharge seacock. In this configuration all waste is flushed from the head to the holding tank. The "Y" valve permits you to use the dockside pumpout feature, or to use the macerator to pump the waste from the holding tank overboard.

CAUTION

Overboard discharge of waste should only be used in approved areas. It is your responsibility to comply with local regulations regarding the discharge of waste.

To pump out the holding tank using the macerator pump:

1. Open the discharge seacock.
2. Move the "Y" valve lever to the down or overboard position.

CAUTION

Do not run the pump dry. Running the pump when there is no waste to pump out of the holding tank will shorten the life of the pump.

3. Activate the macerator pump by turning its circuit breaker "ON."
4. Close the macerator discharge seacock and turn macerator pump "OFF" after the pumpout is complete.

Head Operating Instructions

Before operating the head for the first time, read the owner's manual for the marine toilet.

ELECTRICALLY OPERATED HEAD

1. Open the inlet water seacock below the cabin floor.

CAUTION

Overboard discharge of waste should only be used in approved areas. It is your responsibility to comply with local regulations regarding the discharge of waste.

2. If overboard discharge is to be used, make sure the "Y" valve is in the overboard position, and that the macerator discharge seacock is open.

3. To charge the head, depress the foot pedal on the lower left side of the bowl, and push the flush button. Release the flush button after the bowl is moistened, and then pump the floor pedal 2-4 times to fill the bowl with water.
4. To flush, depress the foot pedal and push the flush button at the same time – hold until all waste is removed.

Notice

To empty the bowl of excess water, operate flush button until water level decreases to desired level.

MANUALLY OPERATED HEAD

1. Open the inlet water seacock below the cabin floor.
2. If overboard discharge is to be used, make sure the “Y” valve is in the overboard position, and that the macerator discharge seacock is open.
3. Pump the floor pedal 2-4 times to fill the bowl with water.
4. To flush, depress the foot pedal and operate flush handle next to head at the same time. Operate handle until all waste is removed.

Notice

To empty the bowl of excess water, operate flush button until water level decreases to desired level.

SAMPLE FLOAT PLAN

Copy this page and fill out the copy before going boating. Leave the filled out copy with a reliable person who can be depended upon to notify the Coast Guard, or other rescue organization, should you not return as scheduled. DO NOT file this plan with the Coast Guard.

Name _____ Telephone _____

Description of Boat: Type _____ Color _____ Trim _____

Registration Number _____

Length _____ Name _____ Make _____

Other Info. _____

Persons Aboard: Name Age Address & Telephone

_____

_____

_____

_____

Engine Type: _____ HP _____

No. of Engines: _____ Fuel Capacity: _____

Survival Equipment:

PFDs _____ Flares _____ Mirror _____

Smoke Signals _____ Flashlight _____ Food _____

Paddles _____ Water _____ Anchor _____

Raft or Dinghy _____ EPIRB _____

Radio: Yes _____ No _____ Type _____ Freq _____

Cell Phone: Yes _____ No _____ Type _____ Number _____

Destination _____ Est. Time of Arrival _____

Expect to Return By _____

Auto Type _____ License No. _____ Parked _____

If not returned by _____ call the Coast Guard, or _____

(Local Authority). Coast Guard Telephone Number: _____

Local Authority Telephone Number: _____

GLOSSARY OF TERMS 12

ABOARD – On or in the boat.
AFLOAT – On the water.
AFT – Toward the rear or stern of the boat.
AGROUND – Touching bottom.
AMIDSHIP – Center or middle of the boat.
ANCHOR – (1) An iron casting shaped to grip the lake bottom to hold the boat. (2) The act of setting the anchor.
ASHORE – On the shore.
ASTERN – Toward the stern.
BAIL – To remove water from the bottom of the boat with a pump, bucket, sponge, etc.
BAITWELL – A miniature livewell used to store and keep live bait alive and healthy.
BEAM – The widest point on the boat.
BEARING – Relative position or direction of an object from the boat.
BILGE – The lowest interior section of the boat hull.
BILGE KEELS – The raised areas or aluminum extrusions on the bottom of a boat that parallel the keel.
BOARDING – To enter the boat.
BOUNDARY WATERS – A body of water between two areas of jurisdiction; i.e., a river between two states.
BOW – The front of the boat.
BULKHEAD – Vertical partition (wall) in a boat.
BUNKS – Carpeted trailer hull supports.
BURDENED BOAT – Term for the boat that must “give-way” to boats with the right-of-way.
CAPACITY PLATE – A plate that provides maximum weight capacity and engine horsepower rating information. It is located in full view of the helm.
CAPSIZE – To turn over.
CAST-OFF – To unfasten mooring lines in preparation for departure.
CENTER LINE – A lengthwise imaginary line which runs fore and aft with the boat’s keel.
CHINE – The point on a boat where the side intersects (meets) the bottom.
CLEAT – A deck fitting with ears to which lines are fastened.
CONSOLE – Also called helm. The steering wheel area of the boat.
CRANKING BATTERY – The main battery used for engine starting and electrical circuits.
CURRENT – Water moving in a horizontal direction.
DECK – The open surface on the boat where the passengers walk.
DEEP CYCLE BATTERIES – Special long-running batteries which can be repeatedly discharged and recharged without significant loss of power.
DOLLY WHEEL – A rolling jack assembly at the front of the trailer used for positioning the coupler during trailer hookup.
DRAFT – The depth of the boat below the water line, measured vertically to the lowest part of the hull.
ELECTROLYSIS – The break-up of metals due to the effects of galvanic corrosion.
FATHOM – Unit of depth or measure; 1 fathom equals 6 feet.

GLOSSARY OF TERMS

FENDERS – Objects placed alongside the boat for cushioning. Sometimes called bumpers.

FORE – Toward the front or bow of the boat. Opposite of aft.

FREEBOARD – The distance from the water to the gunwale.

FUEL SENDING UNIT – The electrical device that is mounted on the outside of a built-in fuel tank and controls the dashboard fuel gauge.

GIVE-WAY BOAT – (1) Term for the boat that must take whatever action necessary to keep well clear of the boat with the right-of-way in meeting or crossing situations. (2) The burdened boat.

GUNWALE – The rail or upper edge of a boat's side.

HEAD – A marine toilet.

HELM – The steering wheel or command area.

HULL – The body of the boat.

HYPOTHERMIA – A physical condition where the body loses heat faster than it can produce it.

IN-LINE FUSE – A type of protective fuse located in the power wire of a direct current (DC) circuit usually near the battery.

KEEL – The lowest portion of the boat; extends fore and aft along the boat's bottom.

LIST – Leaning or tilt of a boat toward the side.

MAKING WAY – Making progress through the water.

MARINE CHART – Seagoing maps showing depths, buoys, navigation aids, etc.

MOORING – An anchor, chain, or similar device that holds a boat in one location.

NAVIGATION AID – Recognizable objects on land or sea such as buoys, towers or lights which are used to fix position to identify safe and unsafe waters.

NO-WAKE SPEED – The speed at which a boat travels to produce an imperceptible wake.

PFD – Personal flotation device.

PITOT TUBE – See SPEEDOMETER PICKUP TUBE.

PLANING HULL – A hull designed to lift, thereby reducing friction and increasing efficiency.

PORPOISE – A condition in which the bow bounces up and down caused by trimming the engine too far out.

PORT – (1) The left side of a boat when facing the bow. (2) A destination or harbor.

PRIVILEGED BOAT – Term used for the boat with the right-of-way.

RIGHT-OF-WAY – Term for the boat that has priority in meeting or crossing situations. The stand on or privileged boat.

RULES OF THE ROAD – Regulations for preventing collisions on the water.

SPEEDOMETER PICKUP TUBE – Also called pitot tube. The plastic device that extends below the bottom of the boat. It connects to the speedometer with plastic flexible tubing.

SPLASHWELL – The section of an outboard-equipped boat that is just forward of the transom.

STAND ON BOAT – Term for the boat that must maintain course and speed in meeting or crossing situations. The privileged boat.

STARBOARD – The right side of the boat when looking towards the bow.

STERN – The back of the boat.

STOW – To pack the cargo.

SURGE BRAKES – A type of trailer braking system designed to automatically actuate when the tow vehicle's brakes are applied.

TRANSDUCER – The unit that sends/receives signals for the depth sounder.

TRANSOM – The transverse beam across the stern.

TRIM – Fore to aft and side to side balance of the boat when loaded.

UNDERWAY – Boat in motion; i.e., not moored or anchored.

USCG – United States Coast Guard

WAKE – The waves that a boat leaves behind when moving through the water.

WATERWAY – A navigable body of water.

V-PAD – A modified vee hull design with a small, flat area in the keel aft.

VISUAL DISTRESS SIGNAL – A device used to signal the need for assistance such as flags, lights and flares.

MONTEREY BOATS LIFETIME LIMITED WARRANTY

MONTEREY BOATS warrants to the original retail purchaser of its product beginning with the 2008 models that it will repair or replace defects in materials and workmanship found to exist in its product during the applicable warranty periods defined below if purchased from an authorized MONTEREY BOATS dealer, subject to the exclusions, limitations, conditions and provisions noted below. All repairs and replacements under the following warranties will be performed by MONTEREY BOATS or an authorized MONTEREY BOATS dealer or representative selected by MONTEREY BOATS at its sole discretion.

LIFETIME LIMITED STRUCTURAL HULL AND DECK WARRANTY:

MONTEREY BOATS warrants to the original retail purchaser of its product that MONTEREY BOATS will repair or replace the fiberglass hull or deck of its product if it is found to be structurally defective in materials or workmanship for as long as the original retail purchaser owns the product. For purposes of this limited warranty: (1) a structural defect is defined as a defect that causes the hull or deck to be unsafe or unfit for use under normal operating conditions; (2) the fiberglass hull is defined as the single fiberglass molded shell and integral fiberglass structural components including stringers, transom and related structural components which are below the hull flange; and (3) the deck is defined as the single fiberglass molded shell and integral fiberglass structural components attached to the hull flange. This warranty is further subject to the exclusions, limitations, conditions and provisions noted below.

TEN-YEAR TRANSFERABLE LIMITED STRUCTURAL HULL AND DECK WARRANTY:

Beginning with the 2008 models, MONTEREY BOATS also offers a Ten-Year Transferable Limited Structural Hull and Deck Warranty. Under this warranty, MONTEREY BOATS will repair or replace the fiberglass hull or deck if it is found to be structurally defective in materials or workmanship within the first ten (10) years after the date of purchase by the original retail purchaser. For purposes of this warranty: (1) a structural defect is defined as a defect that causes the hull or deck to be unsafe or unfit for use under normal operating conditions; (2) the fiberglass hull is defined as the single fiberglass molded shell and integral fiberglass structural components including stringers, transom and related structural components which are below the hull flange; and (3) the deck is defined as the single fiberglass molded shell and integral fiberglass structural components attached to the hull flange. This warranty may be transferred to subsequent purchasers (hereinafter “new owner”) provided the new owner registers the transfer and pays the transfer fee in accordance with the requirements set forth below. This transfer will only apply to the balance of any warranty period left during the ten (10) year period commencing on the date of purchase by the original retail purchaser.

1. The request for transfer must be made in writing by the new owner and sent within thirty (30) days of the date of his/her purchase of the boat to:

   MONTEREY BOATS
   1579 SW 18th Street
   Williston, Florida 32696

2. The request must include: A copy of the bill of sale with the Hull ID number, the new owner’s name and address and a Certified Check or Money Order for the correct transfer fee amount.
3. The transfer fee is $300.00 for boats with hull lengths under 27', $500.00 for boats with hull lengths from 27' but under 33', and $700.00 for boats with hull lengths 33' and over.

In the event fiberglass hull or deck work is required, the new owner must return the boat to the original selling dealer or to a dealer authorized to service MONTEREY BOATS products. The cost of returning the boat to and from MONTEREY BOATS or an authorized MONTEREY BOATS dealer or representative will be the sole responsibility of the new owner. This warranty is further subject to the exclusions, limitations, conditions and provisions noted below.

FIVE-YEAR LIMITED HULL BLISTER WARRANTY:

MONTEREY BOATS warrants to the original retail purchaser of its product that MONTEREY BOATS will repair any osmotic blisters which occur on the underwater gelcoated surfaces of the hull as a result of defects in materials or workmanship within five (5) years from the date of purchase by the original retail purchaser according to the following prorated schedule provided that the original factory gelcoat surface has not been altered in any way:

1. Up to two (2) years from the date of original retail purchase, MONTEREY BOATS will pay 100% of the repair costs.
2. After two (2) years but up to three (3) years from the date of original retail purchase, MONTEREY BOATS will pay 85% of the repair costs.
3. After three (3) years but up to four (4) years from the date of original retail purchase, MONTEREY BOATS will pay 65% of the repair costs.

4. After four (4) years but up to five (5) years from the date of original retail purchase, MONTEREY BOATS will pay 35% of the repair costs.
5. After five (5) years from the date of original retail purchase, MONTEREY BOATS will pay 0% of the repair costs.

Alterations which will void this warranty include, without limitation, damage, accident repair, sanding, scraping, sandblasting, or improper surface preparation for application of a marine barrier coating or bottom paint. A marine barrier coating must be properly applied to the hull bottom if the boat is to be moored in water for periods of more than sixty (60) days in any ninety (90) day period and a marine barrier coating is also required if the boat is to be bottom painted. This warranty is further subject to the exclusions, limitations, conditions and provisions noted below.

TWO-YEAR EXTERIOR COSMETIC GELCOAT LIMITED WARRANTY:

MONTEREY BOATS warrants to the original retail purchaser of its product that MONTEREY BOATS will correct or repair any cracking, crazing or fading of, and any air voids in, the exterior gelcoat surface of the boat as result of defects in materials or workmanship within two (2) years from the date of purchase by the original retail purchaser according to the following prorated schedule provided that the original factory gelcoat surface has not been altered in any way:

1. Up to twelve (12) months from the date of original retail purchase, MONTEREY BOATS will pay 100% of the repair costs.
2. After twelve (12) months but up to fifteen (15) months from the date of original retail purchase, MONTEREY BOATS will pay 55% of the repair costs.
3. After fifteen (15) months but up to twenty-four (24) months from the date of original retail purchase, MONTEREY BOATS will pay 30% of the repair costs.
4. After twenty-four (24) months from the date of original retail purchase, MONTEREY BOATS will pay 0% of the repair costs.

Alterations which will void this warranty include, without limitation, damage, accident repair, sanding, scraping, sandblasting, improper surface preparation for application of a marine barrier coating or paint, or if damage to the exterior gelcoat surface results from or is attributable to the addition of items not installed by MONTEREY BOATS. This warranty is further subject to the exclusions, limitations, conditions and provisions noted below.

LIMITED WARRANTY FOR NON-STRUCTURAL PARTS AND COMPONENTS:

MONTEREY BOATS warrants to the original retail purchaser of its product that MONTEREY BOATS will repair or replace the following described non-structural parts and components for the reasons and during the periods indicated below measured from the date of purchase by the original retail purchaser whether or not separately warranted by the part or component manufacturer:

1. Canvas: if it fades or dry rots within five (5) years or if it is found to be defective in materials or workmanship within two (2) years.
2. Upholstery: if it is found to be defective in materials or workmanship within two (2) years.
3. All other non-structural parts and components: if they are found to be defective in materials or workmanship within one (1) year.

WHAT IS NOT COVERED:

The limited warranties set forth above do not cover:

1. Engines, outdrives, generators, air conditioners, and trim tabs;
2. Any boat that has been repaired or altered by persons other than MONTEREY BOATS or an authorized MONTEREY BOATS dealer or representative or modified in any way so as to affect its use and operation;
3. Any boat used for racing or for rental or commercial purposes or that has been subject to misuse, neglect, accident or structural modification;
4. Normal wear, tear, deterioration (including rust) of hardware, vinyl coverings, vinyl and fabric upholstery, plastic, stainless steel, other metal, wood, and trim tape.
5. Any defect caused by the failure of the owner to provide reasonable care and maintenance.
6. Installation of engines, generators, air conditioners, wake board towers, parts or other after market accessories produced, installed or attached by anyone other than MONTEREY BOATS.
7. Loss of time, inconvenience, loss of the use of the boat or other matters not specifically covered hereunder; and
8. Any boat purchased by a consumer through an authorized dealer located in the United States, which said boat is registered and/or operated outside the United States.

GENERAL PROVISIONS:

All general, special, indirect, incidental and/or consequential damages are excluded from this warranty and are totally disclaimed by MONTEREY BOATS. It is the intent of the parties that the owner's sole and exclusive remedy is the repair or replacement of the product or its allegedly defective component parts and that no other legal or equitable remedies shall be available to said owner. Some states do not allow the exclusion of incidental or consequential damages so the inclusion of incidental or consequential damages may not apply to you. This is a limited warranty. MONTEREY BOATS makes no warranty other than contained herein. To the extent allowed by law any warranties of merchantability or fitness for a particular purpose arising in state law are expressly excluded. To the extent allowed by law, any implied warranty of merchantability is limited to the duration of the limited warranty applicable to the particular warranted part, component, or defect. All obligations of monterey boats are specifically set forth herein. Some states do not allow limitations on how long an implied warranty lasts, so the above limitation may not apply to you. MONTEREY BOATS' obligation with respect to this warranty is limited to making repairs to or replacing the defective parts and no claim for breach of warranty shall be cause for cancellation or rescission of the contract or sale for any boat manufactured by MONTEREY BOATS.

MONTEREY BOATS will discharge its obligations under this warranty as rapidly as possible, but cannot guarantee any specific completion date due to the different nature of claims which may be made and services which may be required. This limited warranty gives you specific legal rights, and you may also have other rights which may vary from state to state. No person, including a MONTEREY BOATS dealer, is authorized to make any repairs or replacements under this warranty without the prior written approval of MONTEREY BOATS. MONTEREY BOATS shall in no way be responsible for any repairs not PRE-AUTHORIZED by a MONTEREY BOATS Customer Service Manager or repairs performed by a repair shop not PRE-AUTHORIZED by a MONTEREY BOATS Customer Service Manager.

MONTEREY BOATS does not authorize any person to create or assume for it any other obligation or liability with respect to its products. The sales personnel or other employees of MONTEREY BOATS dealers are not authorized to make warranties concerning MONTEREY BOATS products. No brochure, pamphlet or other written or pictorial presentation constitutes a warranty or representation as to any aspect of MONTEREY BOATS products.

MONTEREY BOATS shall have no obligation under this Lifetime Limited Warranty unless and until each of the following conditions are met:

1. The original retail purchaser of its product or the MONTEREY BOATS dealer either completes and returns the Warranty Registration to MONTEREY BOATS by mail or facsimile or the MONTEREY BOATS dealer registers the Warranty electronically "online" within fifteen (15) days from the date the product is delivered to the original retail purchaser;
2. Notice of each warranty claim is given to the MONTEREY BOATS dealer within a reasonable period of time after discovery of any claimed defect;
3. Notice of each warranty claim is made in writing to MONTEREY BOATS within the applicable time periods identified in the respective warranties as measured from the date of purchase by the original retail purchaser; and
4. All transportation charges incurred in transporting the boat for warranty work are paid for by the owner.

MONTEREY BOATS reserves the right to make changes at any time, without notice, in prices or to make changes in design, colors, specifications, equipment, options, materials, etc., and MONTEREY BOATS shall be under no obligation to equip or modify product built prior to such changes.

IMPORTANT: Proper registration of the Warranty with MONTEREY BOATS is important for purposes of recording customer information for notification and correction of product defects under the Federal Boat Safety Act.

MONTEREY BOATS is the registered tradename and trademark of SEABRING MARINE INDUSTRIES, INC., a Florida corporation, the warrantor herein.

SEABRING MARINE INDUSTRIES, INC.
d.b.a. MONTEREY BOATS
1579 SW 18th Street – Williston, Florida 32696
Telephone (352) 528-2628 / Facsimile (352) 529-2628

D E A L E R

Monterey Boats
1579 S.W. 18th Street
Williston, FL 32696
Phone 352-529-9181 Fax 352-529-9173

www.montereyboats.com

P/N 63101200-03-MANU KCC Printed in USA Rev. 11/2007