MONTEREY
BOATS

320-335-340-355
SPORT YACHT
WIRING DIAGRAMS

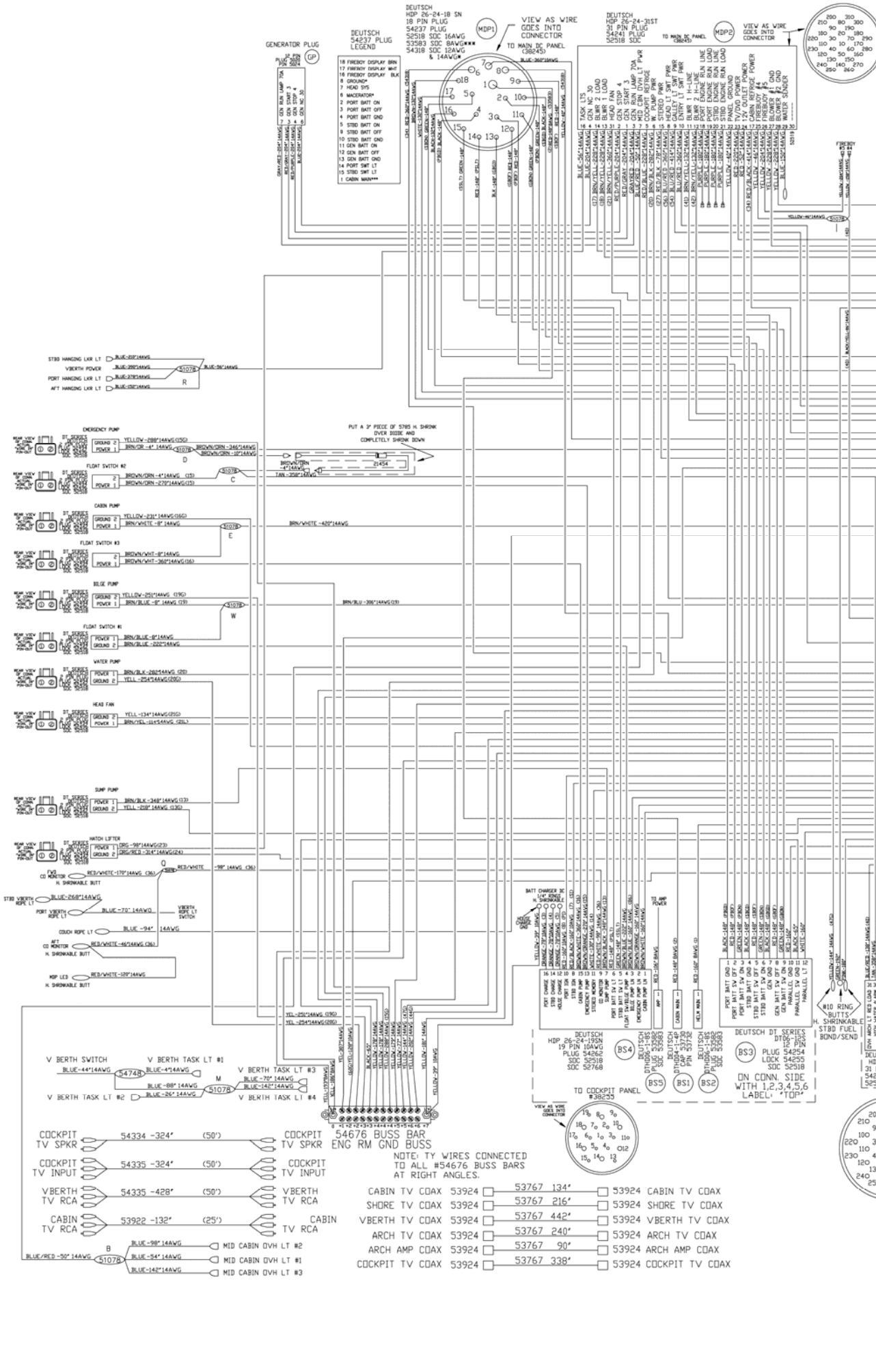

GENERATOR PLUG
DEUTSCH 54237 PLUG LEGEND
DEUTSCH HDP 26-24-18 SN 18 PIN PLUG 54237 PLUG 52518 SOC 16AWG 53583 SOC 8AWG*** 54318 SOC 12AWG & 14AWG*
VIEW AS WIRE GOES INTO CONNECTOR
TO MAIN DC PANEL (38245)
DEUTSCH HDP 26-24-31ST 31 PIN PLUG 54241 PLUG 52518 SOC
TO MAIN DC PANEL (38245)
VIEW AS WIRE GOES INTO CONNECTOR
PUT A 3" PIECE OF 5785 H. SHRINK OVER DIODE AND COMPLETELY SHRINK DOWN
EMERGENCY PUMP
FLOAT SWITCH #2
CABIN PUMP
FLOAT SWITCH #3
BILGE PUMP
FLOAT SWITCH #1
WATER PUMP
HEAD FAN
SUMP PUMP
HATCH LIFTER
V BERTH SWITCH
V BERTH TASK LT #1
V BERTH TASK LT #2
V BERTH TASK LT #3
V BERTH TASK LT #4
54676 BUSS BAR ENG RM GND BUSS
DEUTSCH HDP 26-24-19SN 19 PIN 10AWG PLUG 54262 SOC 52518 SOC 52768
DEUTSCH DT SERIES DT06-12S 12 PIN PLUG 54254 LOCK 54255 SOC 52518
ON CONN. SIDE WITH 1,2,3,4,5,6 LABEL: "TOP"
TO COCKPIT PANEL #38255
#10 RING BUTTS H. SHRINKABLE STBD FUEL BOND/SEND
COCKPIT TV SPKR 54334 -324' (50') COCKPIT TV SPKR
COCKPIT TV INPUT 54335 -324' (50') COCKPIT TV INPUT
VBERTH TV RCA 54335 -428' (50') VBERTH TV RCA
CABIN TV RCA 53922 -132' (25') CABIN TV RCA
MID CABIN OVH LT #2
MID CABIN OVH LT #1
MID CABIN OVH LT #3
NOTE: TY WIRES CONNECTED TO ALL #54676 BUSS BARS AT RIGHT ANGLES.
CABIN TV COAX 53924 53767 134' 53924 CABIN TV COAX
SHORE TV COAX 53924 53767 216' 53924 SHORE TV COAX
VBERTH TV COAX 53924 53767 442' 53924 VBERTH TV COAX
ARCH TV COAX 53924 53767 240' 53924 ARCH TV COAX
ARCH AMP COAX 53924 53767 90' 53924 ARCH AMP COAX
COCKPIT TV COAX 53924 53767 338' 53924 COCKPIT TV COAX

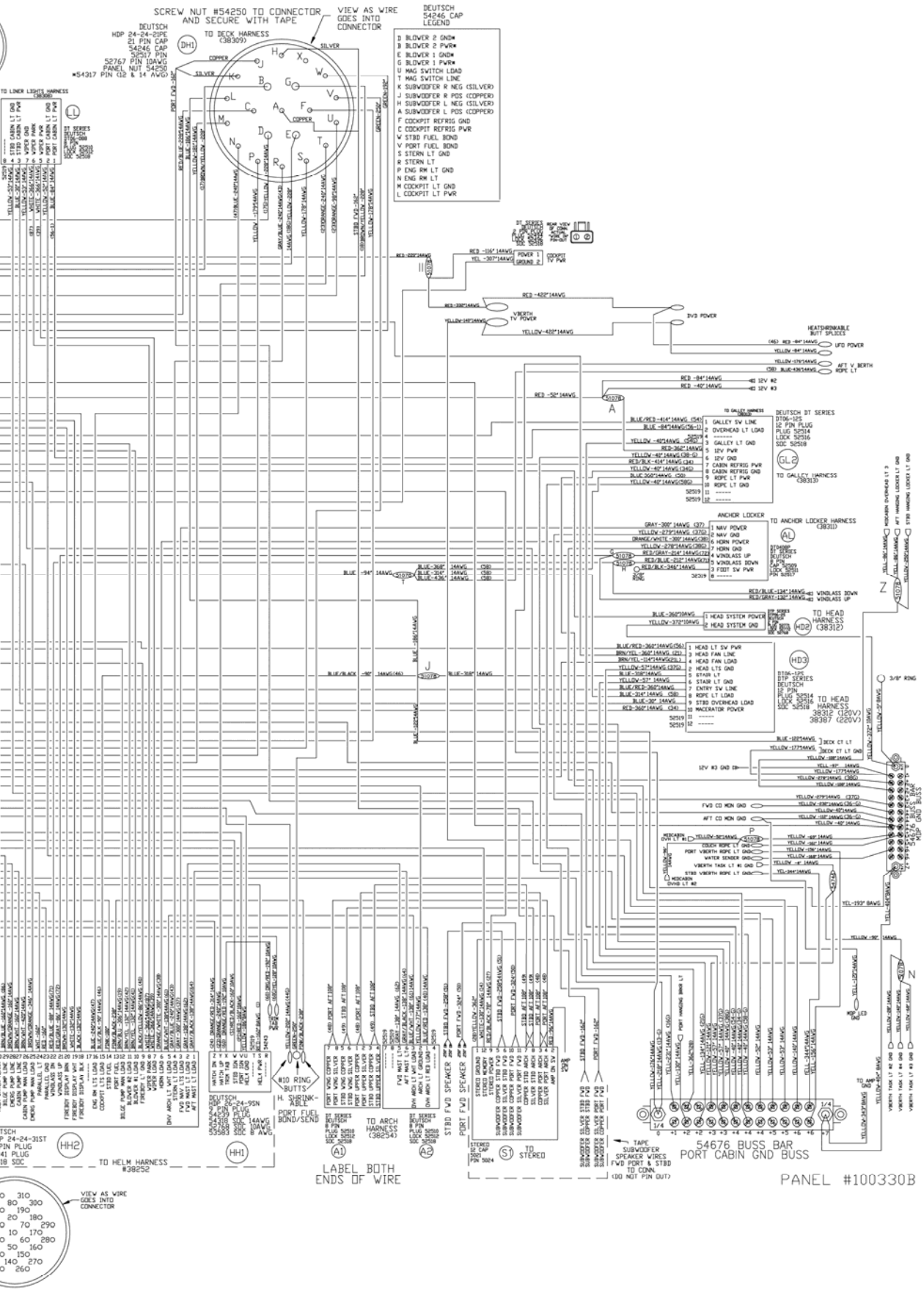

DC Main Hull Harness 320SY/335SY

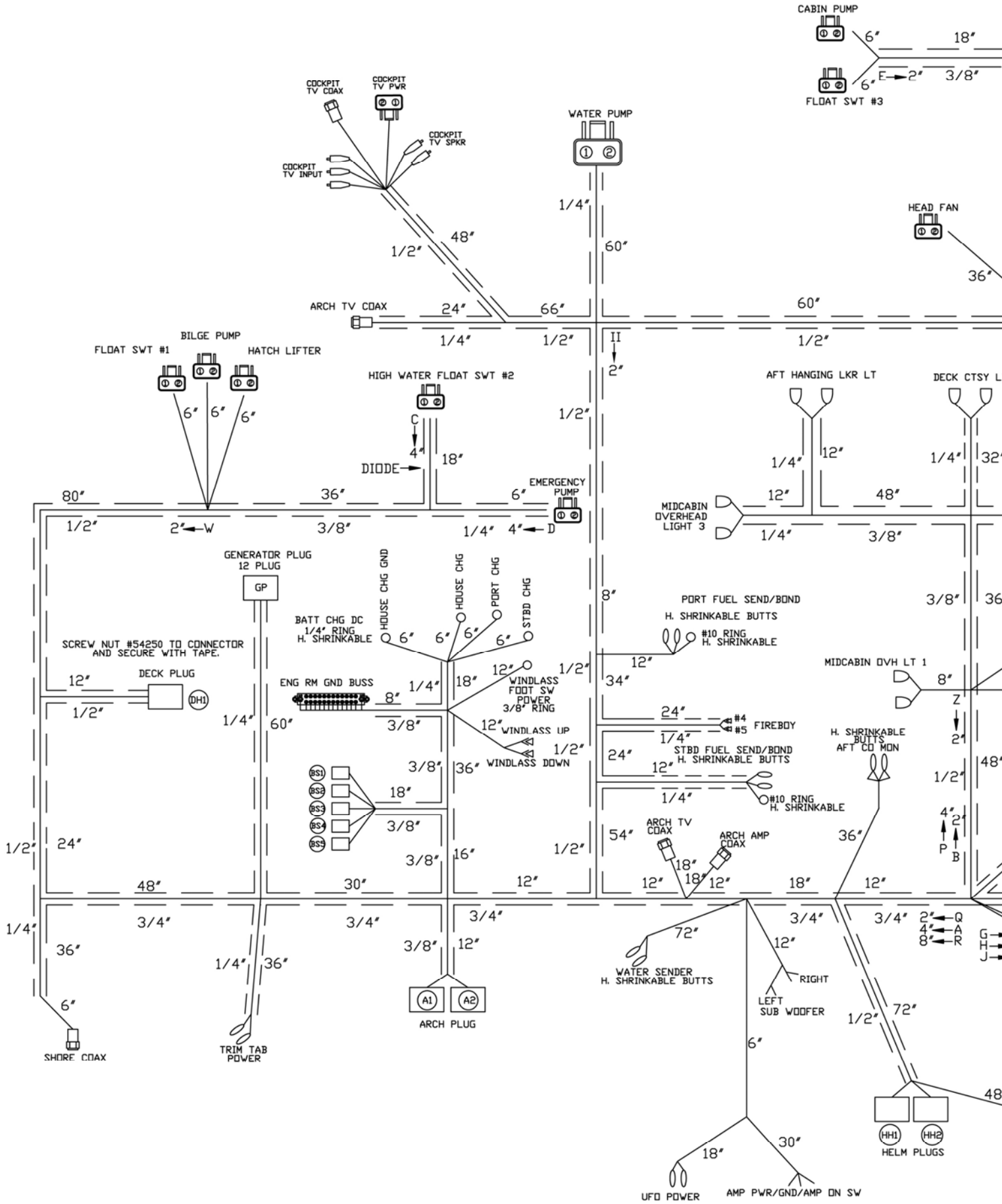
CABIN PUMP
FLOAT SWT #3
COCKPIT TV COAX
COCKPIT TV PWR
COCKPIT TV SPKR
COCKPIT TV INPUT
WATER PUMP
HEAD FAN
ARCH TV COAX
BILGE PUMP
FLOAT SWT #1
HATCH LIFTER
HIGH WATER FLOAT SWT #2
DIODE
EMERGENCY PUMP
AFT HANGING LKR LT
DECK CTSY L
MIDCABIN OVERHEAD LIGHT 3
GENERATOR PLUG 12 PLUG
GP
SCREW NUT #54250 TO CONNECTOR AND SECURE WITH TAPE.
DECK PLUG
DH1
BATT CHG DC 1/4" RING H. SHRINKABLE
HOUSE CHG GND
HOUSE CHG
PORT CHG
STBD CHG
ENG RM GND BUSS
WINDLASS FOOT SW POWER 3/8" RING
WINDLASS UP
WINDLASS DOWN
BS1
BS2
BS3
BS4
BS5
PORT FUEL SEND/BOND
H. SHRINKABLE BUTTS
#10 RING H. SHRINKABLE
MIDCABIN OVH LT 1
#4
#5
FIREBOY
STBD FUEL SEND/BOND
H. SHRINKABLE BUTTS
#10 RING H. SHRINKABLE
H. SHRINKABLE BUTTS AFT CO MON
ARCH TV COAX
ARCH AMP COAX
WATER SENDER H. SHRINKABLE BUTTS
RIGHT
LEFT SUB WOOFER
ARCH PLUG
A1
A2
SHORE COAX
TRIM TAB POWER
HH1
HH2
HELM PLUGS
UFO POWER
AMP PWR/GND/AMP ON SW

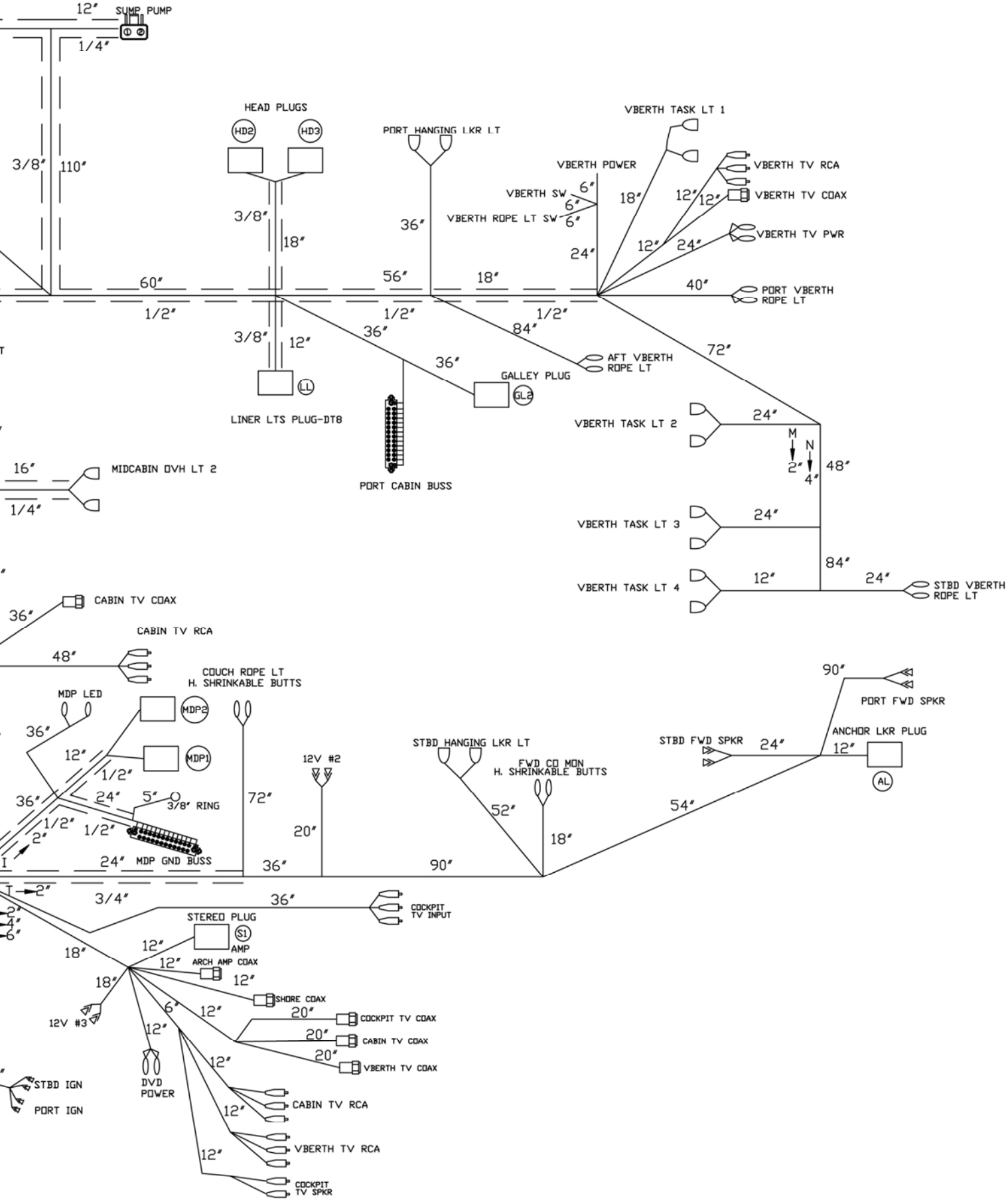

DC Main Hull Harness Routing 320SY/335SY

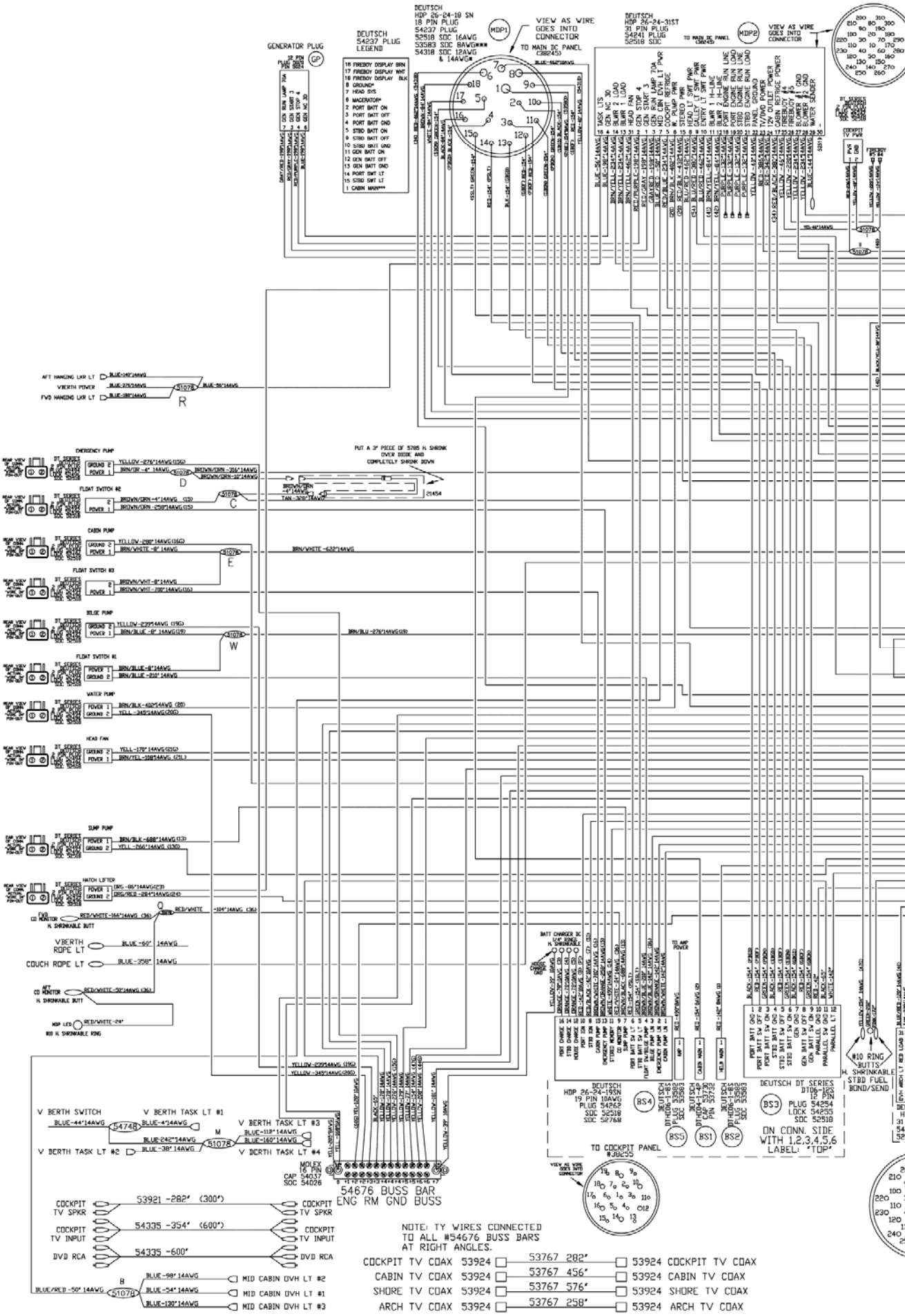
DEUTSCH
HDP 26-24-18 SN
18 PIN PLUG
54237 PLUG
52518 SOC 16AWG
53583 SOC 8AWG***
54318 SOC 12AWG
& 14AWG*
MDP1
VIEW AS WIRE GOES INTO CONNECTOR
TO MAIN DC PANEL (388245)
DEUTSCH
HDP 26-24-31ST
31 PIN PLUG
54241 PLUG
52518 SOC
MDP2
VIEW AS WIRE GOES INTO CONNECTOR
TO MAIN DC PANEL (388245)
GENERATOR PLUG
GP
DEUTSCH
54237 PLUG
LEGEND
16 FIREBOY DISPLAY BRN
17 FIREBOY DISPLAY WHT
18 FIREBOY DISPLAY BLK
8 GROUND*
7 HEAD SYS
6 MACERATOR*
2 PORT BATT ON
3 PORT BATT OFF
4 PORT BATT GND
5 STBD BATT ON
9 STBD BATT OFF
10 STBD BATT GND
11 GEN BATT ON
12 GEN BATT OFF
13 GEN BATT GND
14 PORT SWT LT
15 STBD SWT LT
1 CABIN MAN***
AFT HANGING LKR LT
VBERTH POWER
FWD HANGING LKR LT
R
EMERGENCY PUMP
FLOAT SWITCH #2
D
C
CABIN PUMP
FLOAT SWITCH #3
E
BILGE PUMP
FLOAT SWITCH #1
W
WATER PUMP
HEAD FAN
SUMP PUMP
HATCH LIFTER
Q
CD MONITOR
H. SHRINKABLE BUTT
VBERTH ROPE LT
BLUE-66" 14AWG
COUCH ROPE LT
BLUE-358" 14AWG
AFT CD MONITOR
H. SHRINKABLE BUTT
MDP LED
RED H. SHRINKABLE RING
PUT A 3" PIECE OF 5785 H. SHRINK OVER DIODE AND COMPLETELY SHRINK DOWN
V BERTH SWITCH
V BERTH TASK LT #1
V BERTH TASK LT #2
V BERTH TASK LT #3
V BERTH TASK LT #4
M
MOLEX
16 PIN
CAP 54037
SOC 54026
54676 BUSS BAR
ENG RM GND BUSS
COCKPIT TV SPKR
COCKPIT TV INPUT
DVD RCA
53921 -282" (300")
54335 -354" (600")
54335 -600"
B
MID CABIN OVH LT #2
MID CABIN OVH LT #1
MID CABIN OVH LT #3
BATT CHARGER DC
H. SHRINKABLE
TO AMP POWER
DEUTSCH
HDP 26-24-19SN
19 PIN 10AWG
PLUG 54263
SOC 52518
SOC 52768
BS4
TO COCKPIT PANEL #26020
DEUTSCH DT SERIES
DT06-12SA
12 PIN
PLUG 54254
LOCK 54255
SOC 52510
BS3
ON CONN. SIDE
WITH 1,2,3,4,5,6
LABEL: "TOP"
BS5
BS1
BS2
#10 RING
BUTTS
H. SHRINKABLE
STBD FUEL
BOND/SEND
NOTE: TY WIRES CONNECTED TO ALL #54676 BUSS BARS AT RIGHT ANGLES.
COCKPIT TV COAX 53924
53767 282'
53924 COCKPIT TV COAX
CABIN TV COAX 53924
53767 456'
53924 CABIN TV COAX
SHORE TV COAX 53924
53767 576'
53924 SHORE TV COAX
ARCH TV COAX 53924
53767 258'
53924 ARCH TV COAX

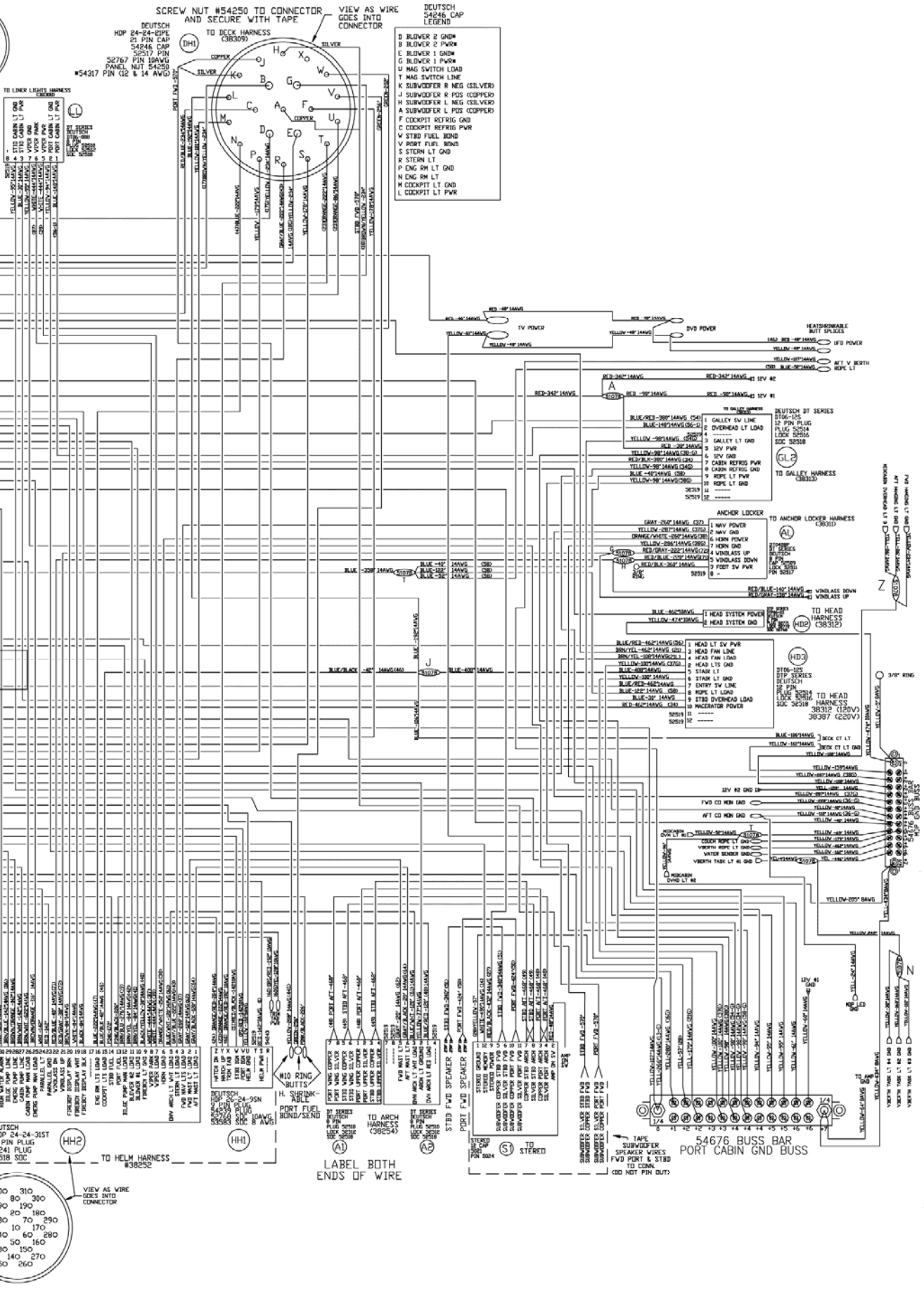

DC Main Hull Harness 340SY/355SY

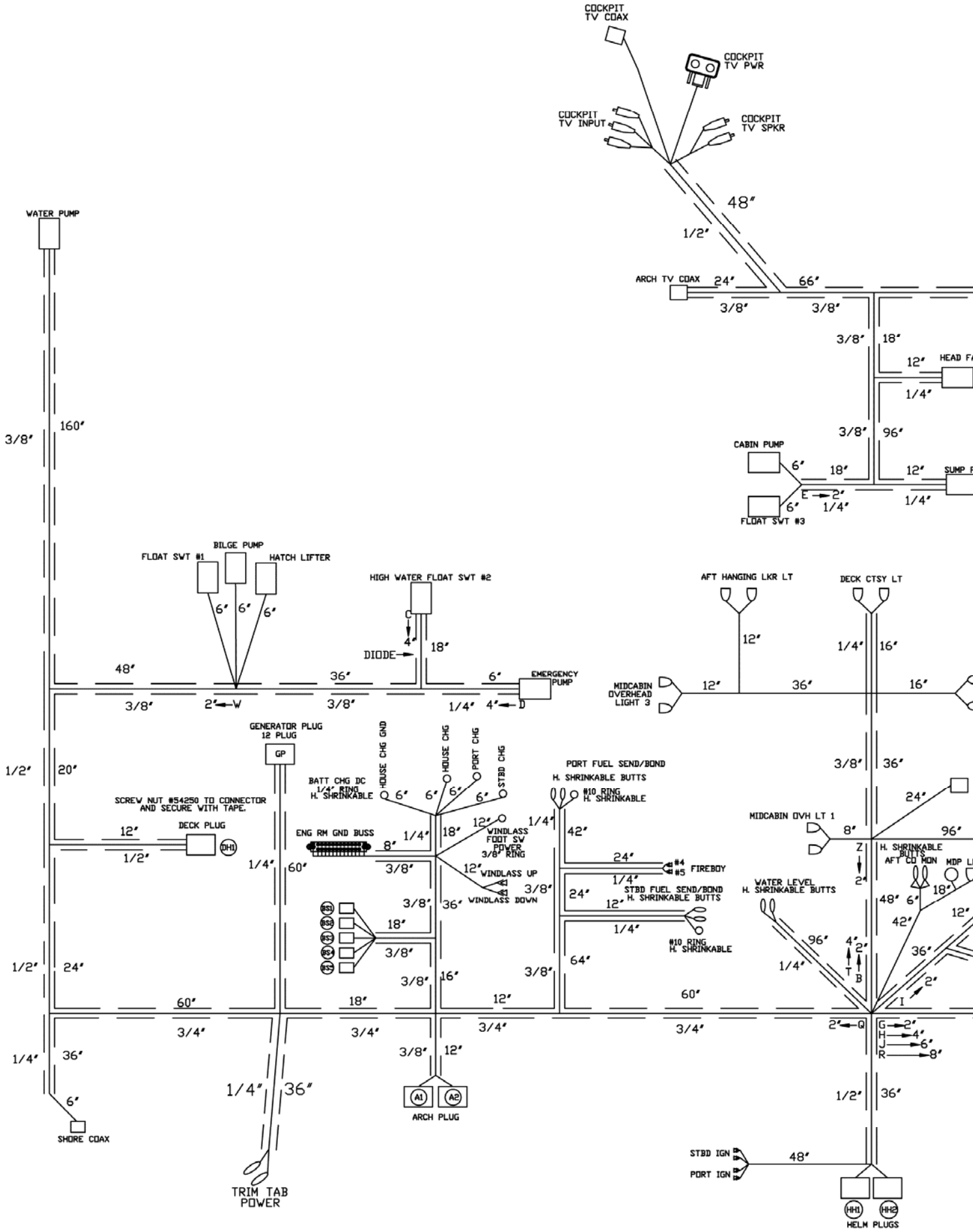
COCKPIT TV COAX
COCKPIT TV PWR
COCKPIT TV INPUT
COCKPIT TV SPKR
48"
1/2"
ARCH TV COAX
24"
66"
3/8"
3/8"
3/8"
18"
12"
HEAD F/
1/4"
3/8"
96"
CABIN PUMP
6"
18"
12"
SUMP P
E
2"
1/4"
1/4"
6"
FLOAT SWT #3
WATER PUMP
3/8"
160"
BILGE PUMP
FLOAT SWT #1
HATCH LIFTER
6"
6"
6"
HIGH WATER FLOAT SWT #2
C
4"
DIODE
18"
48"
36"
6"
EMERGENCY PUMP
3/8"
2"
W
3/8"
1/4"
4"
D
AFT HANGING LKR LT
DECK CTSY LT
12"
1/4"
16"
MIDCABIN OVERHEAD LIGHT 3
12"
36"
16"
GENERATOR PLUG 12 PLUG
GP
HOUSE CHG GND
HOUSE CHG
PORT CHG
STBD CHG
PORT FUEL SEND/BOND
H. SHRINKABLE BUTTS
#10 RING H. SHRINKABLE
3/8"
36"
1/2"
20"
BATT CHG DC 1/4" RING H. SHRINKABLE
6"
6"
6"
6"
SCREW NUT #54250 TO CONNECTOR AND SECURE WITH TAPE.
DECK PLUG
DH1
12"
1/2"
ENG RM GND BUSS
1/4"
18"
12"
WINDLASS FOOT SW POWER 3/8" RING
1/4"
42"
24"
#4
#5
FIREBOY
1/4"
8"
1/4"
60"
3/8"
12"
WINDLASS UP
3/8"
WINDLASS DOWN
24"
STBD FUEL SEND/BOND H. SHRINKABLE BUTTS
12"
1/4"
#10 RING H. SHRINKABLE
3/8"
36"
BS1
BS2
BS3
BS4
BS5
18"
3/8"
3/8"
16"
3/8"
64"
1/2"
24"
60"
18"
12"
60"
3/4"
3/4"
3/4"
3/4"
MIDCABIN OVH LT 1
8"
24"
96"
Z
2"
H. SHRINKABLE BUTTS
AFT CD MON
MDP L
WATER LEVEL H. SHRINKABLE BUTTS
18"
48"
6"
42"
12"
96"
4"
2"
T
B
1/4"
36"
2"
I
2"
Q
G
2"
H
4"
J
6"
R
8"
1/4"
36"
6"
SHORE COAX
1/4"
36"
TRIM TAB POWER
3/8"
12"
A1
A2
ARCH PLUG
1/2"
36"
STBD IGN
PORT IGN
48"
HH1
HH2
HELM PLUGS

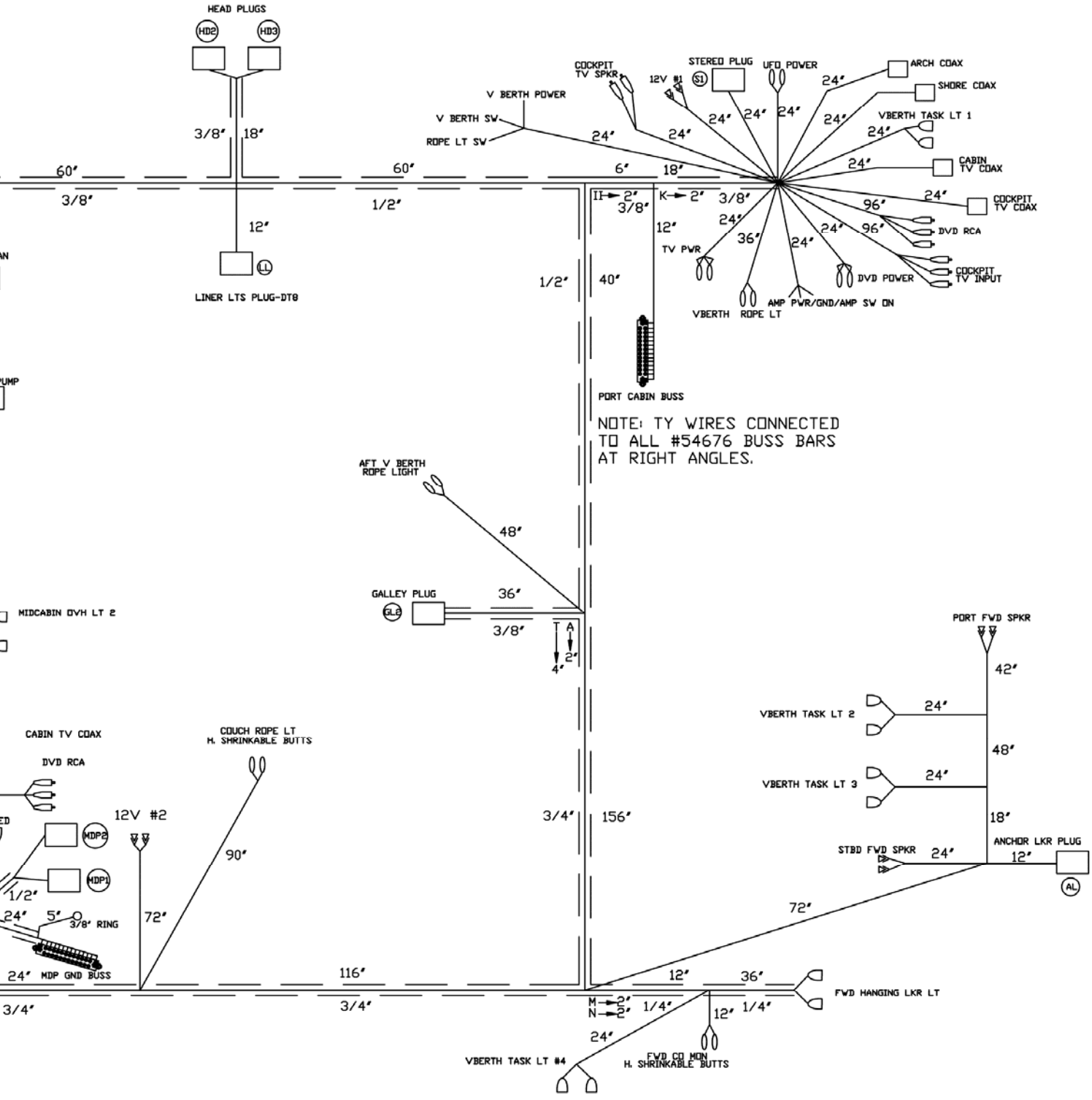

DC Main Hull Harness Routing 340SY/355SY

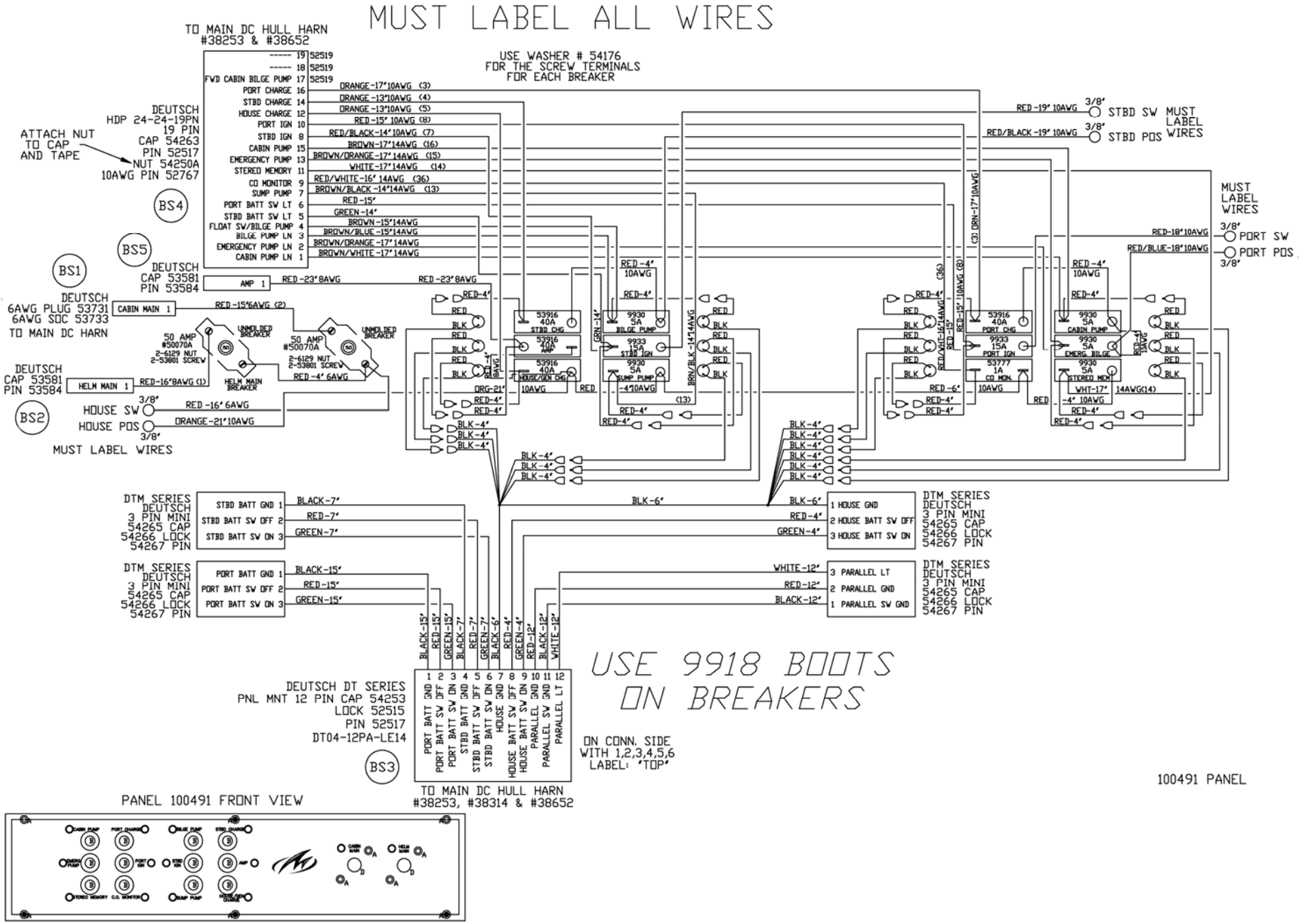

Engine Room Breaker Panel

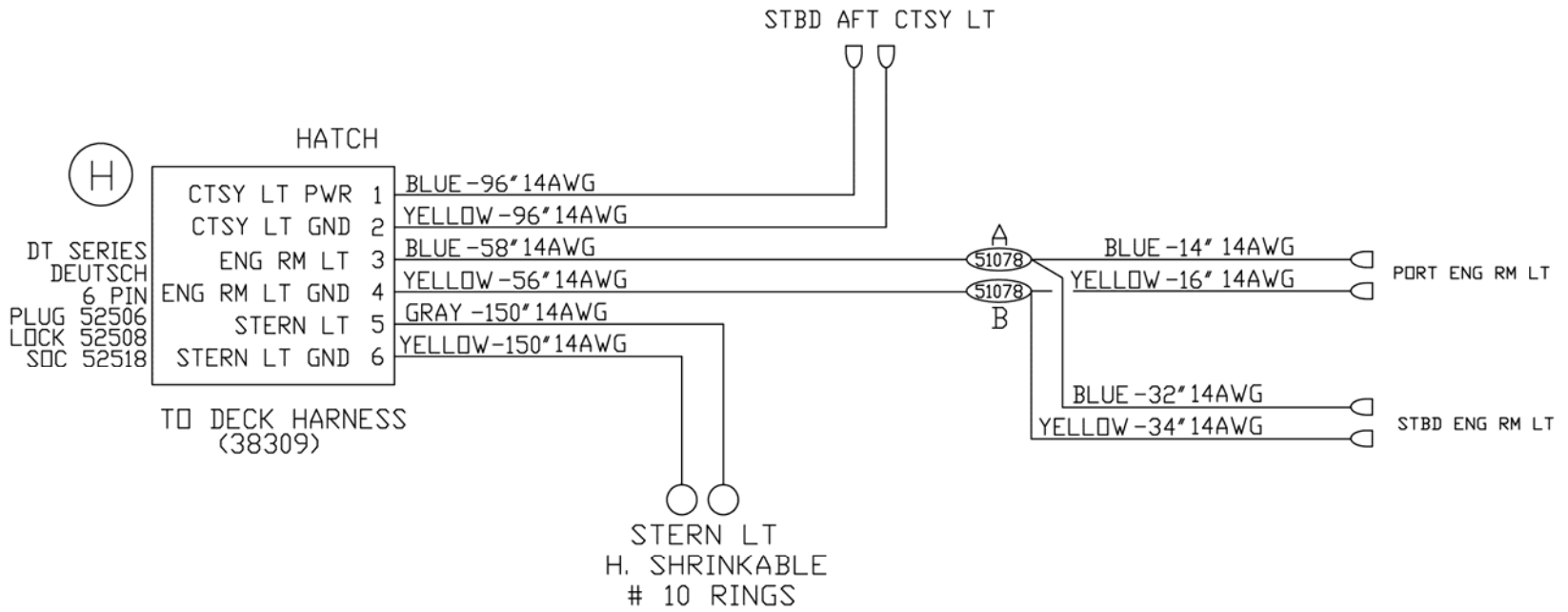

SPOT TAPE
TINNED WIRE

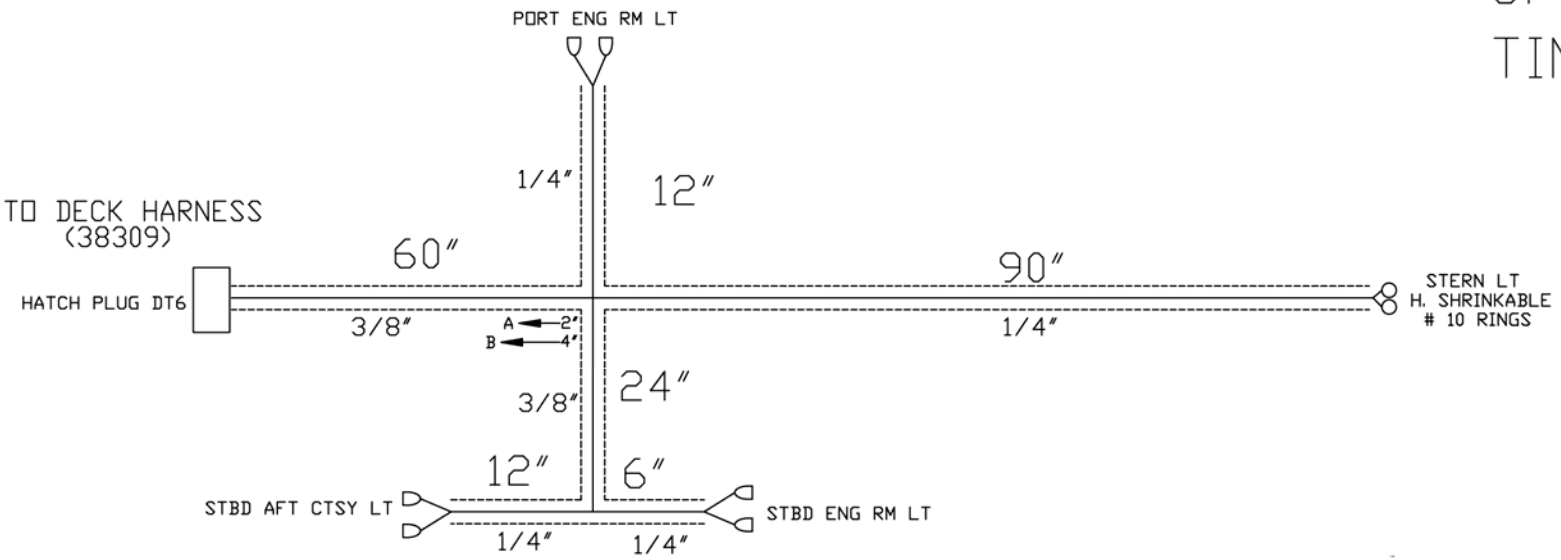

Engine Hatch Harness

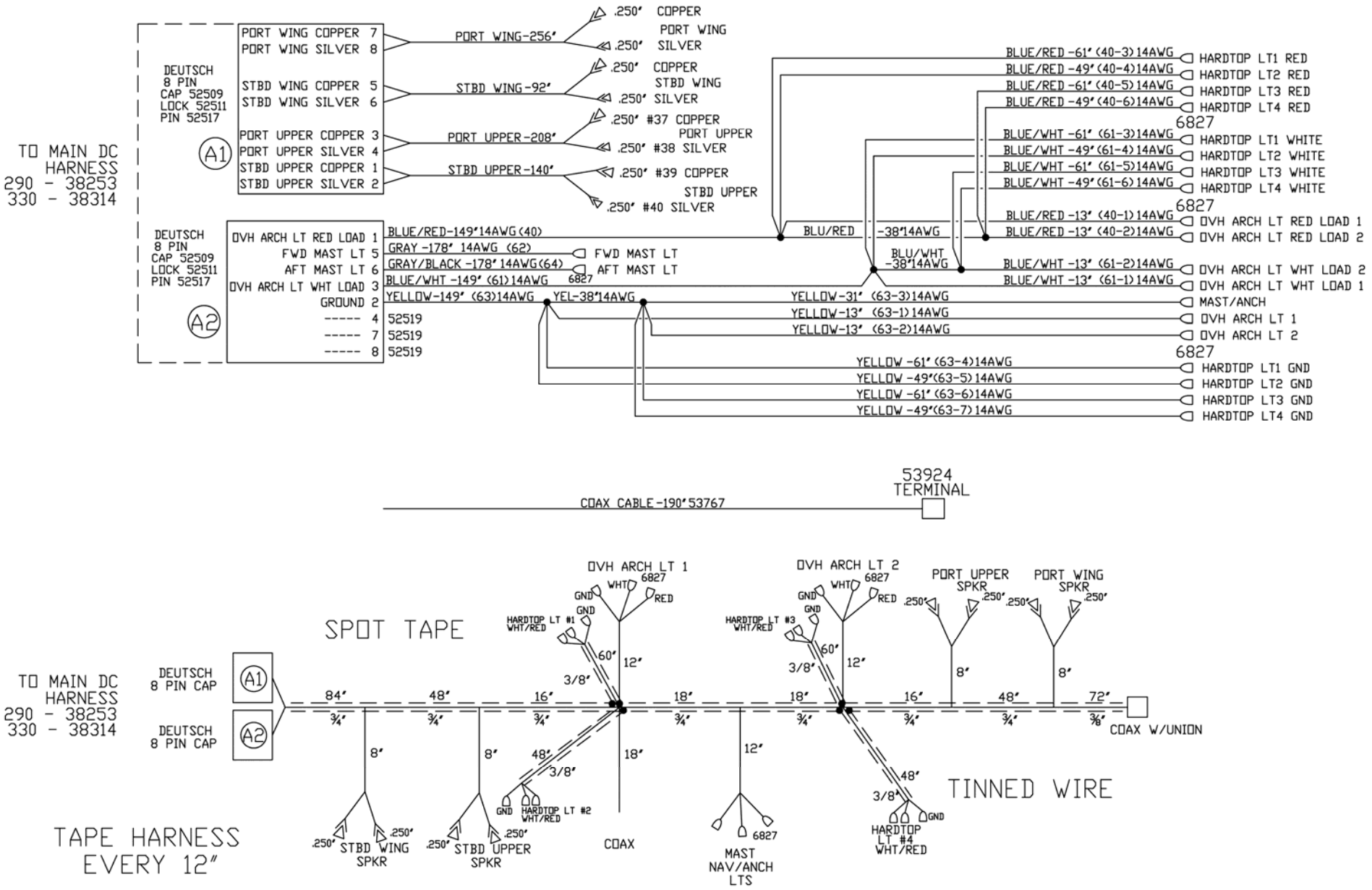

Hard Top Harness

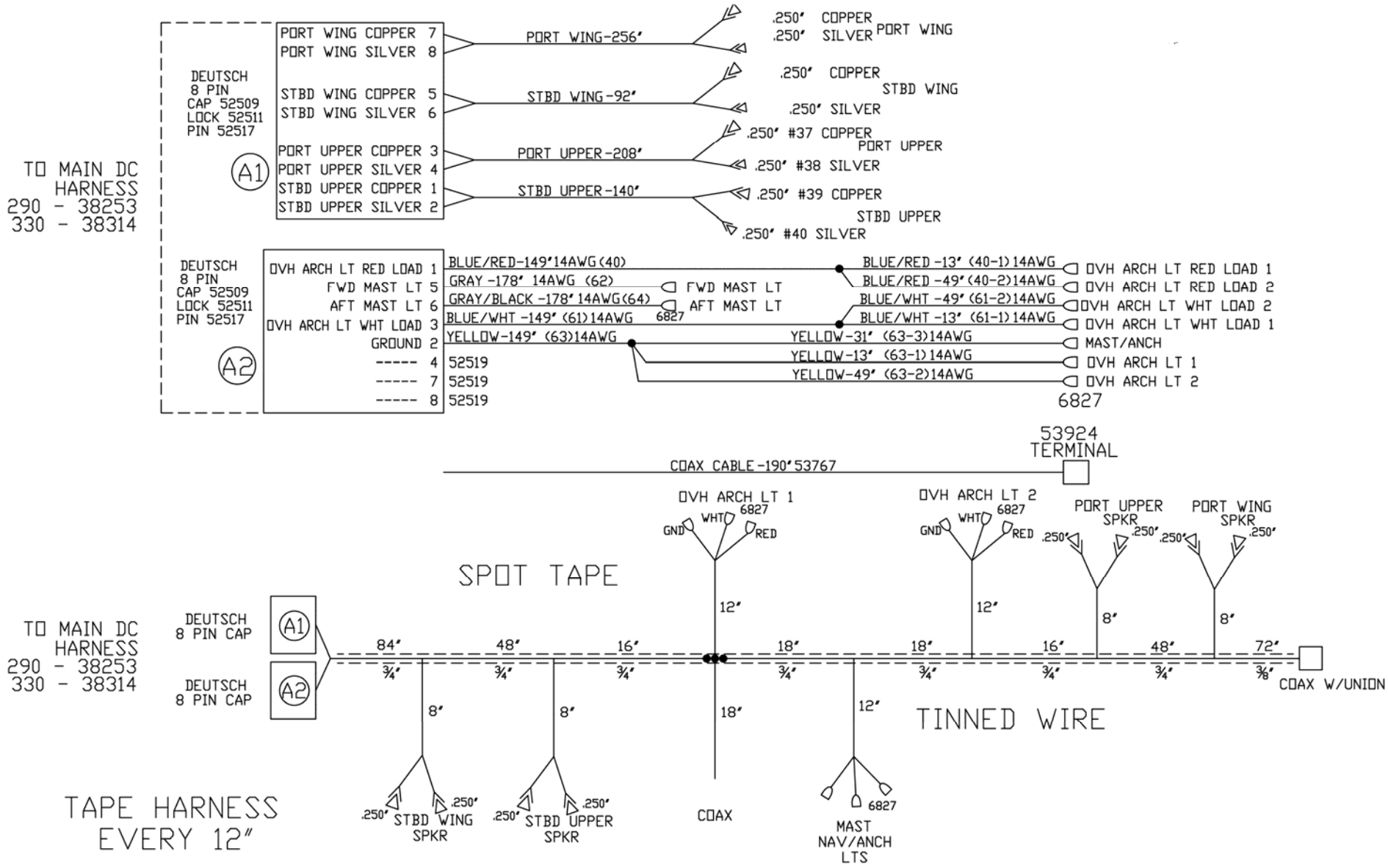

Radar Arch Harness

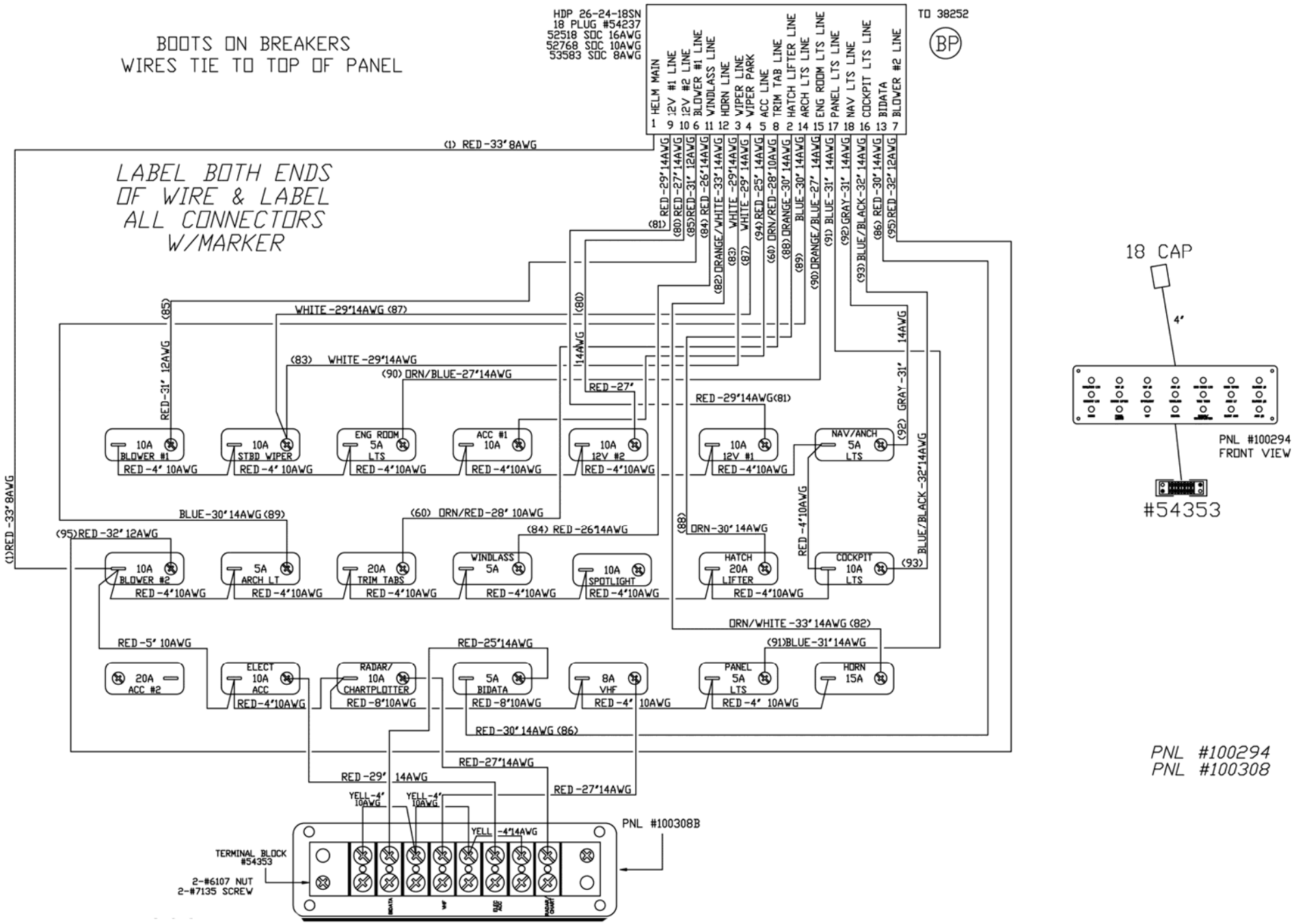

Cockpit Breaker Panel

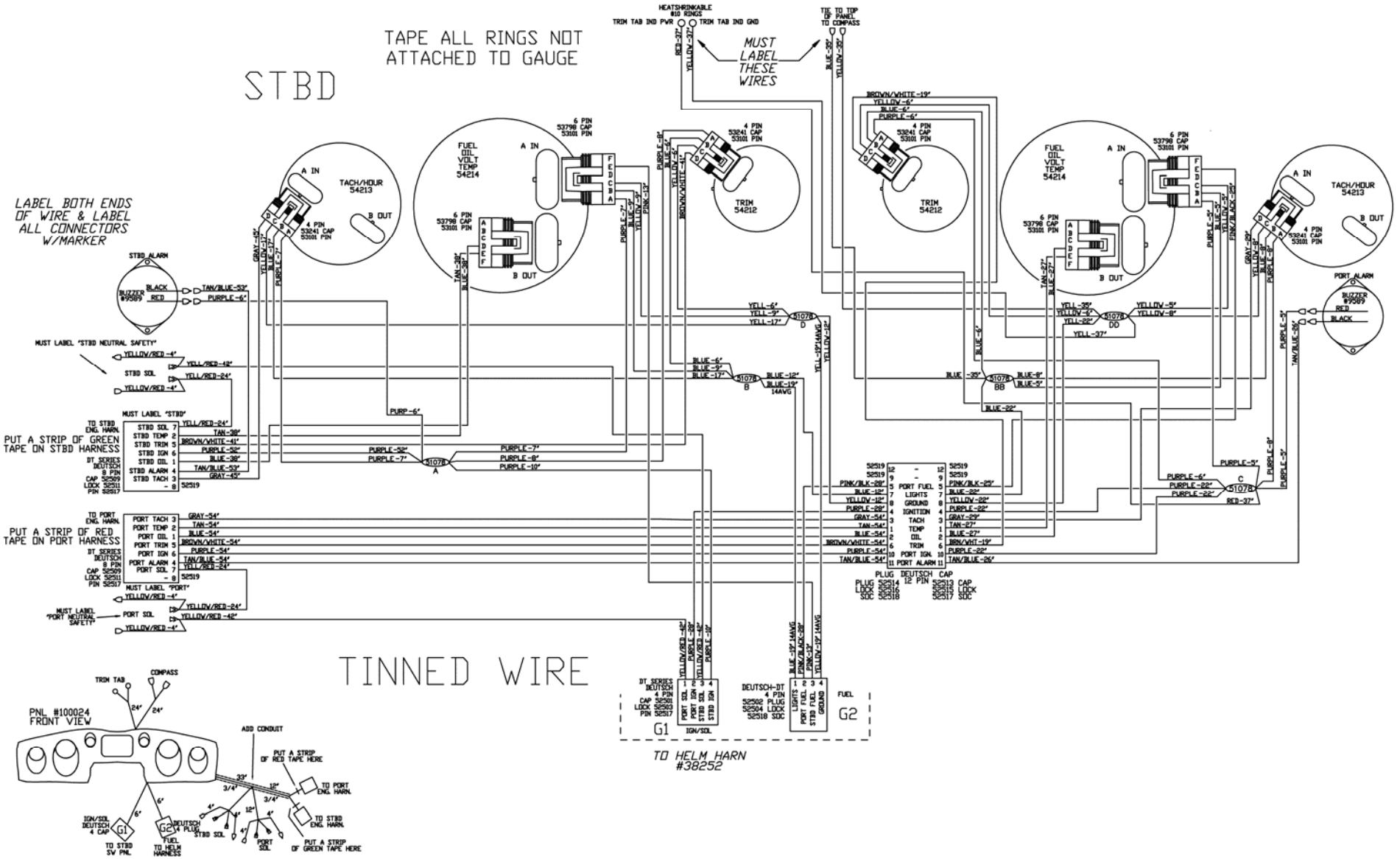
TAPE ALL RINGS NOT ATTACHED TO GAUGE
STBD
LABEL BOTH ENDS OF WIRE & LABEL ALL CONNECTORS W/MARKER
MUST LABEL THESE WIRES
HEATSHRINKABLE #10 RINGS
TRIM TAB IND PWR
TRIM TAB IND GND
TIE TO TOP OF PANEL TO COMPASS
TACH/HOUR 54213
FUEL OIL VOLT TEMP 54214
TRIM 54212
STBD ALARM
PORT ALARM
BUZZER #9589
MUST LABEL "STBD NEUTRAL SAFETY"
STBD SOL
MUST LABEL "STBD"
PUT A STRIP OF GREEN TAPE ON STBD HARNESS
TO STBD ENG. HARN.
DT SERIES DEUTSCH 8 PIN CAP 52509 LOCK 52511 PIN 52517
STBD SOL 7
STBD TEMP 2
STBD TRIM 5
STBD IGN 6
STBD OIL 1
STBD ALARM 4
STBD TACH 3
52519
PUT A STRIP OF RED TAPE ON PORT HARNESS
TO PORT ENG. HARN.
PORT TACH 3
PORT TEMP 2
PORT OIL 1
PORT TRIM 5
PORT IGN 6
PORT ALARM 4
PORT SOL 7
MUST LABEL "PORT"
MUST LABEL "PORT NEUTRAL SAFETY"
PORT SOL
PORT FUEL
LIGHTS
GROUND
IGNITION
TACH
TEMP
OIL
TRIM
PORT IGN.
PORT ALARM
PLUG DEUTSCH CAP
PLUG 52514 12 PIN 52513 CAP
LOCK 52504 52510 LOCK
SOC 52518 52517 SOC
TINNED WIRE
DT SERIES DEUTSCH 4 PIN CAP 52508 LOCK 52509 PIN 52517
PORT SOL IGN
STBD SOL IGN
IGN/SOL
G1
DEUTSCH-DT 4 PIN PLUG 52502 LOCK 52504 52518 SOC
LIGHTS
PORT FUEL
STBD FUEL
GROUND
FUEL
G2
TO HELM HARN #38252
PNL #100024 FRONT VIEW
TRIM TAB
COMPASS
ADD CONDUIT
PUT A STRIP OF RED TAPE HERE
TO PORT ENG. HARN.
TO STBD ENG. HARN.
PUT A STRIP OF GREEN TAPE HERE
IGN/SOL DEUTSCH 4 CAP
TO STBD SW PNL
DEUTSCH 4 PLUG
FUEL HARNESS
TO HELM HARNESS
STBD SOL
PORT SOL

Gauge Panel

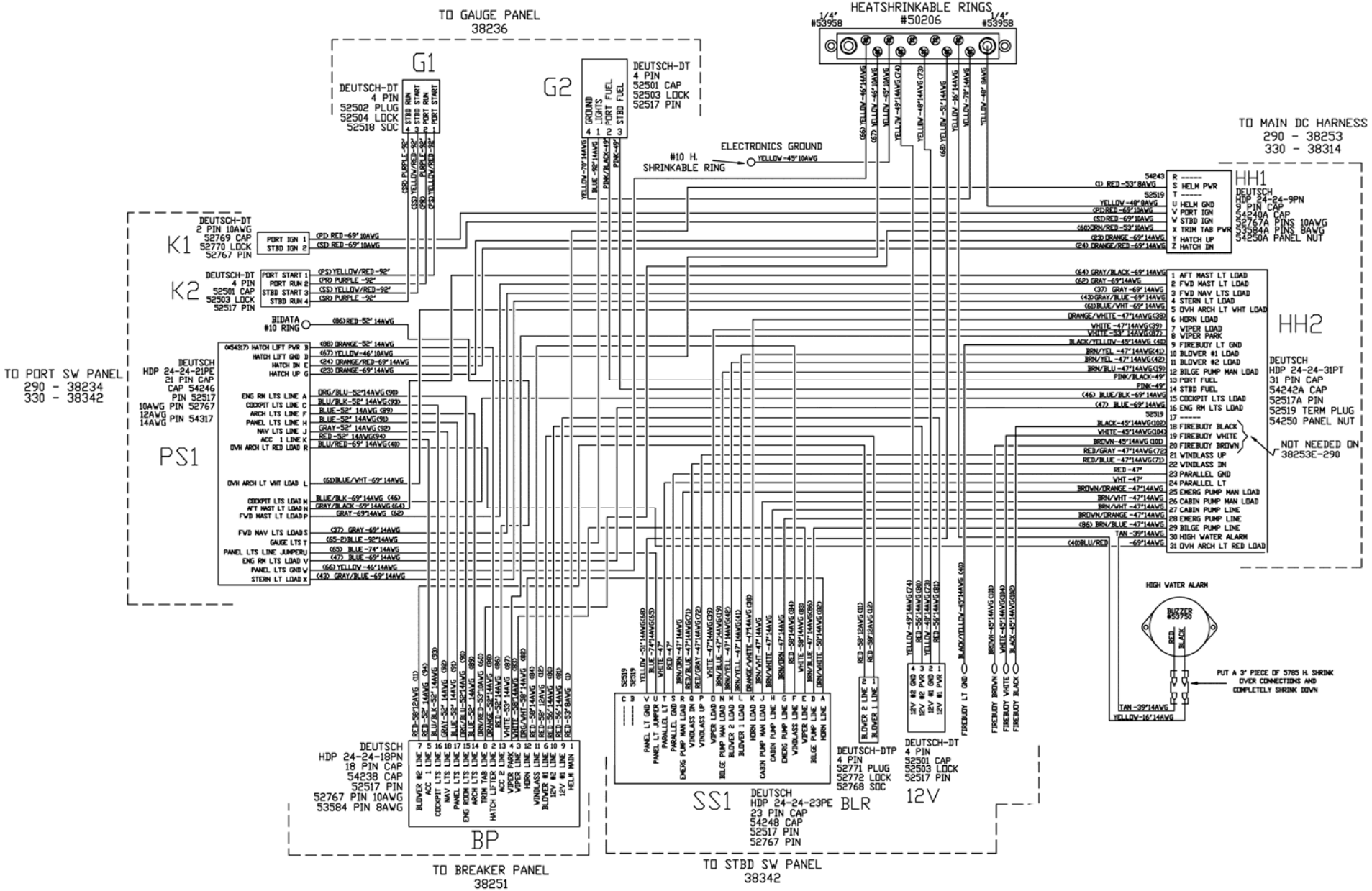

Helm Wiring Harness

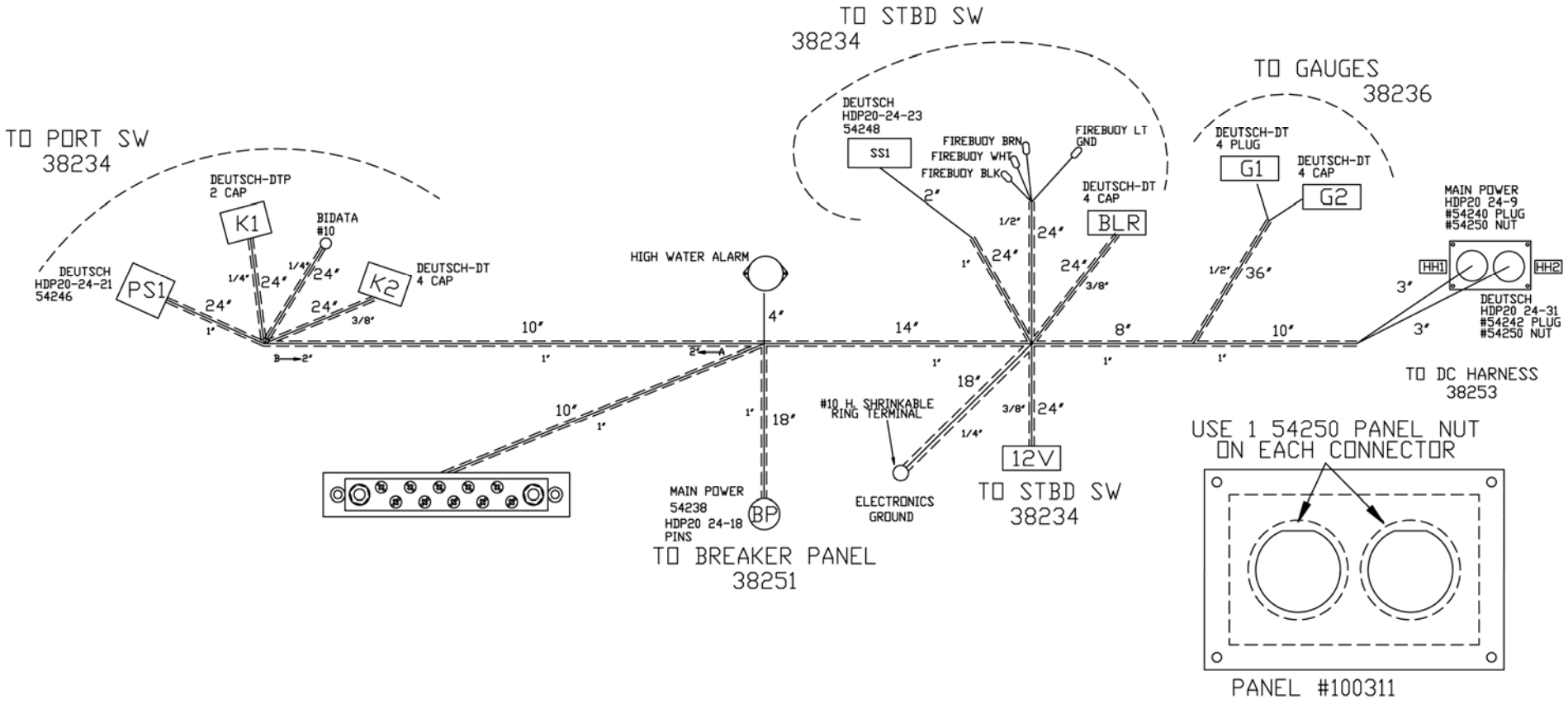

Helm Wiring Harness Routing

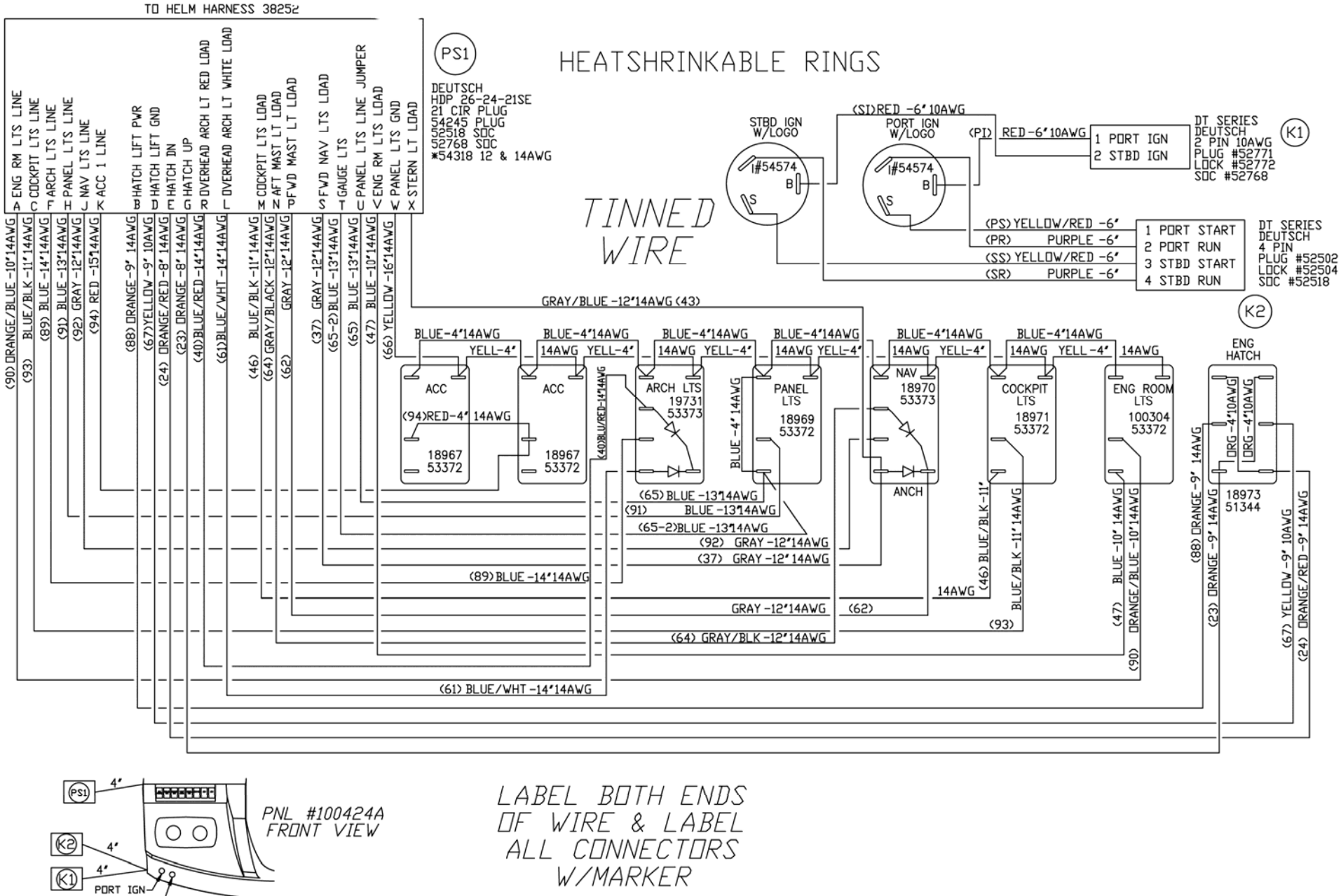

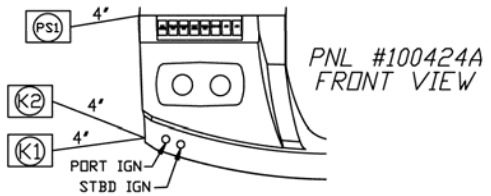

PNL #100424A
FRONT VIEW

LABEL BOTH ENDS
OF WIRE & LABEL
ALL CONNECTORS
W/MARKER

Dash Port Switch Panel

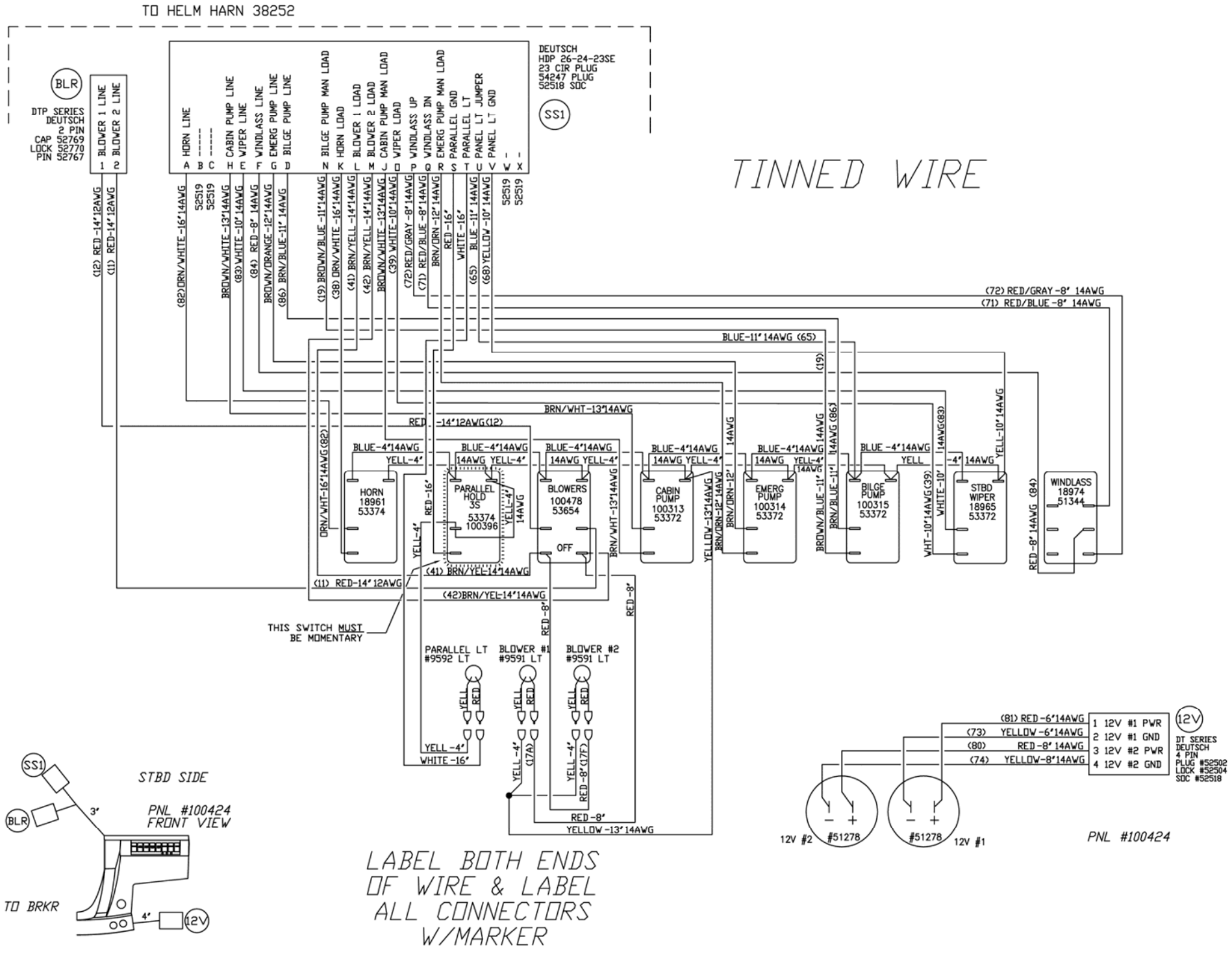

Dash STBD. Switch Panel

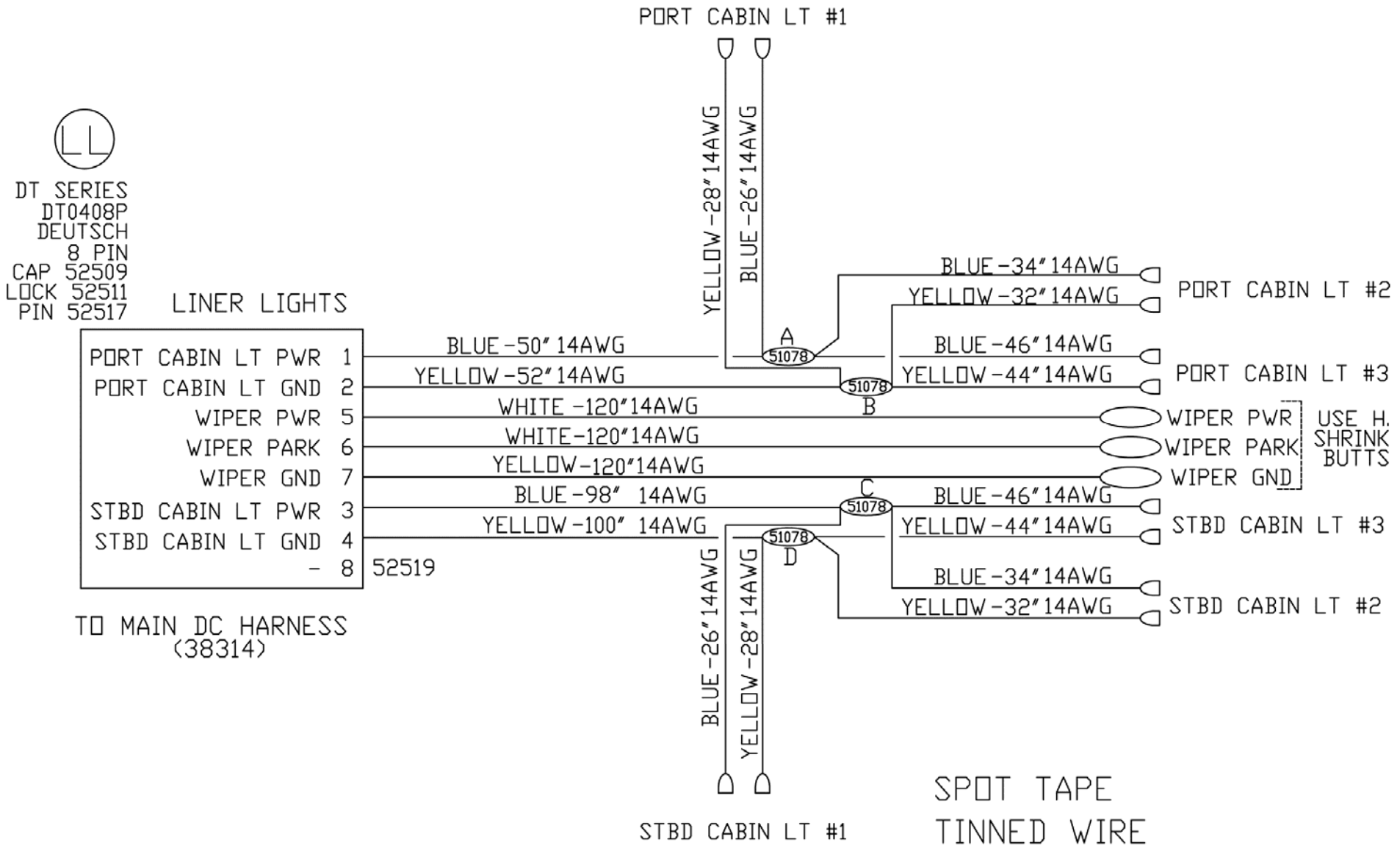

Headliner Lights Harness

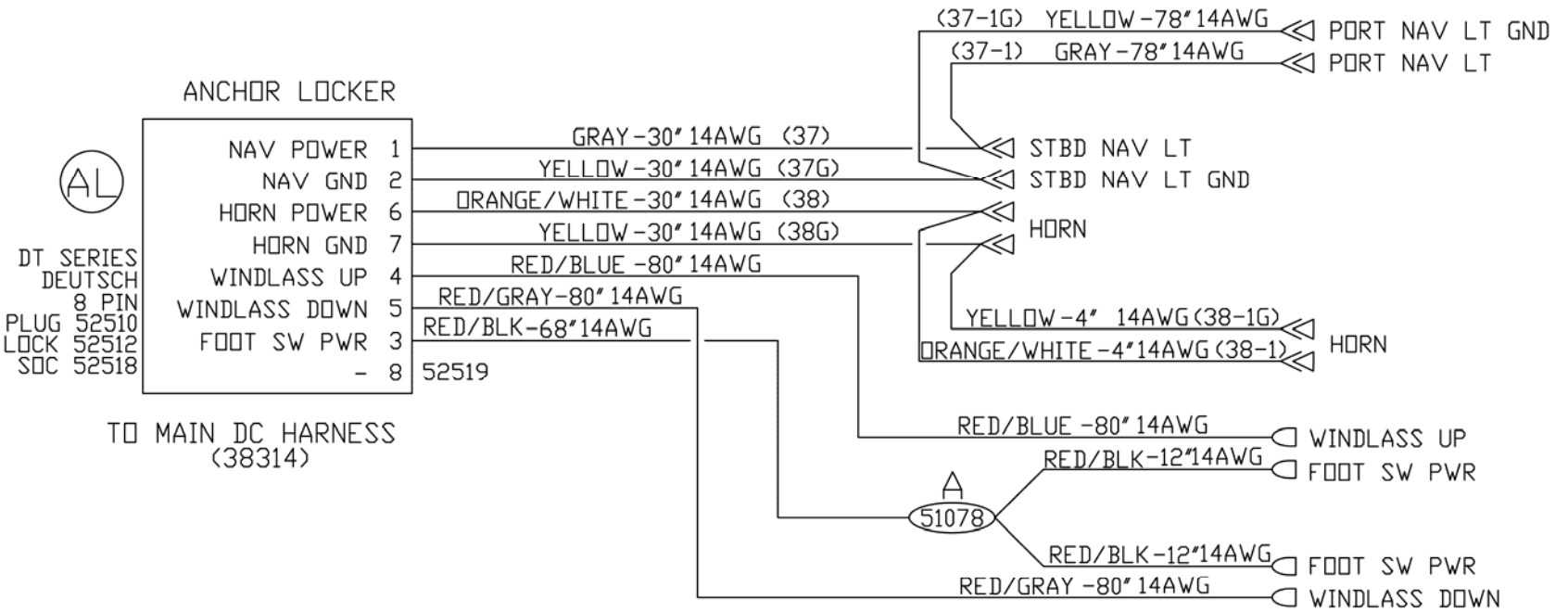

SPOT TAPE
TINNED WIRE

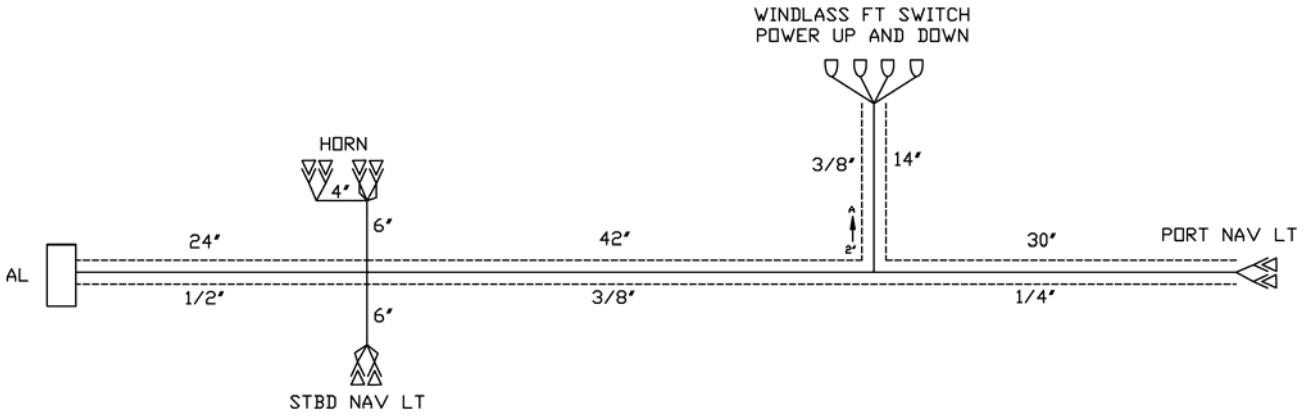

TO MAIN DC HARNESS
(38314)

Anchor Locker Harness

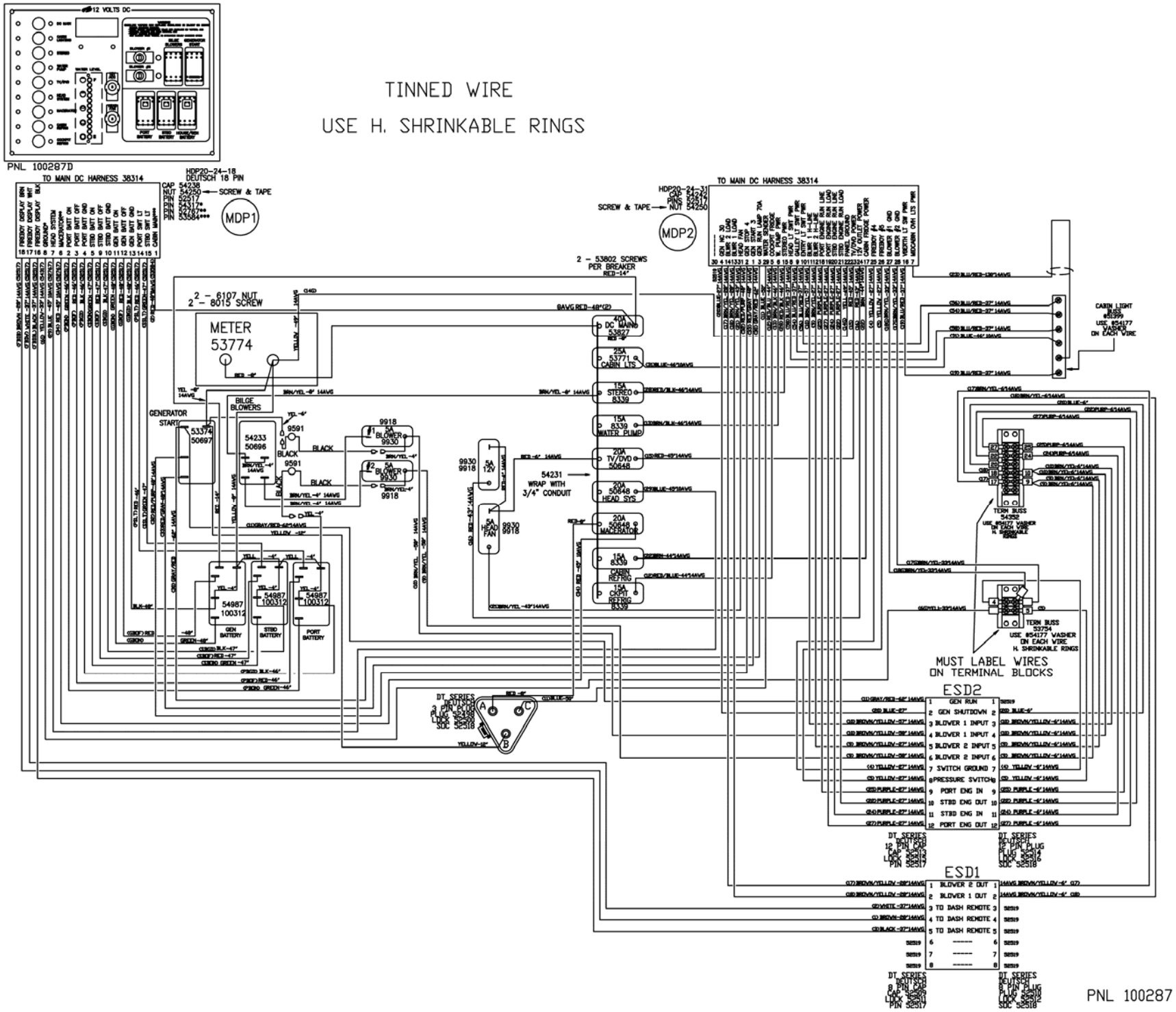

12V DC Panel Gas

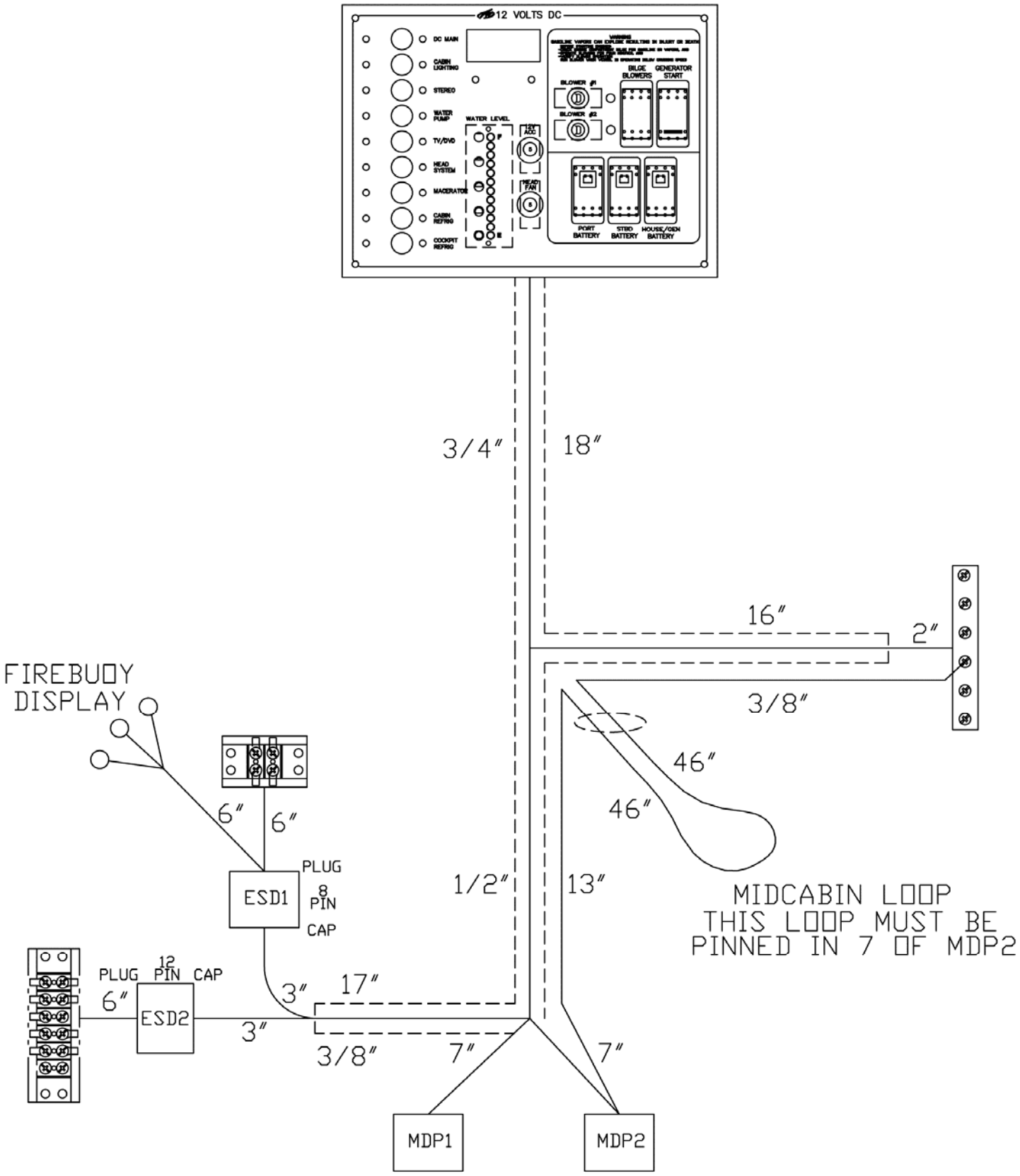

12V DC Panel Gas Routing

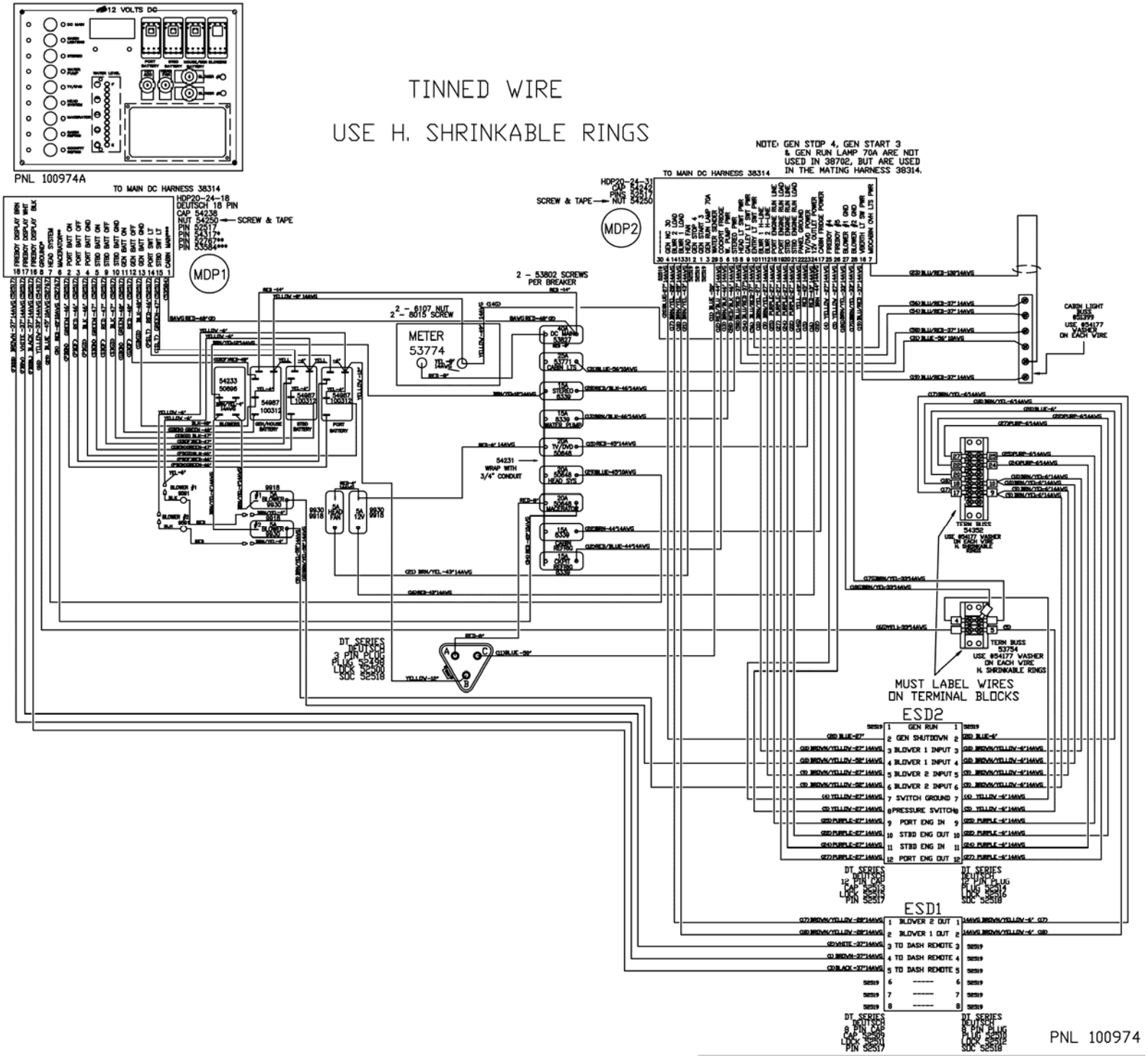

12V DC Panel Diesel

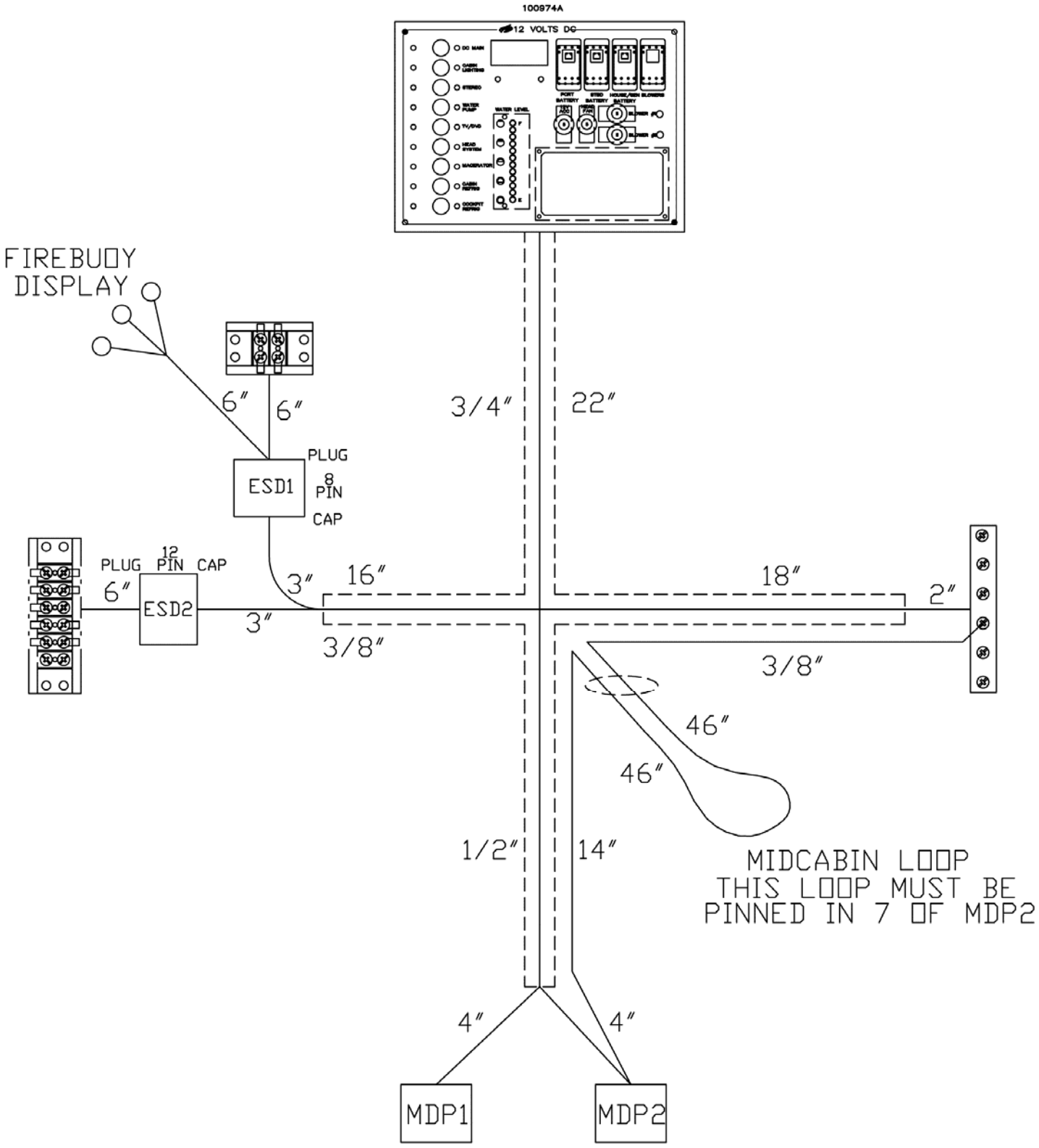

12V DC Panel Diesel Routing

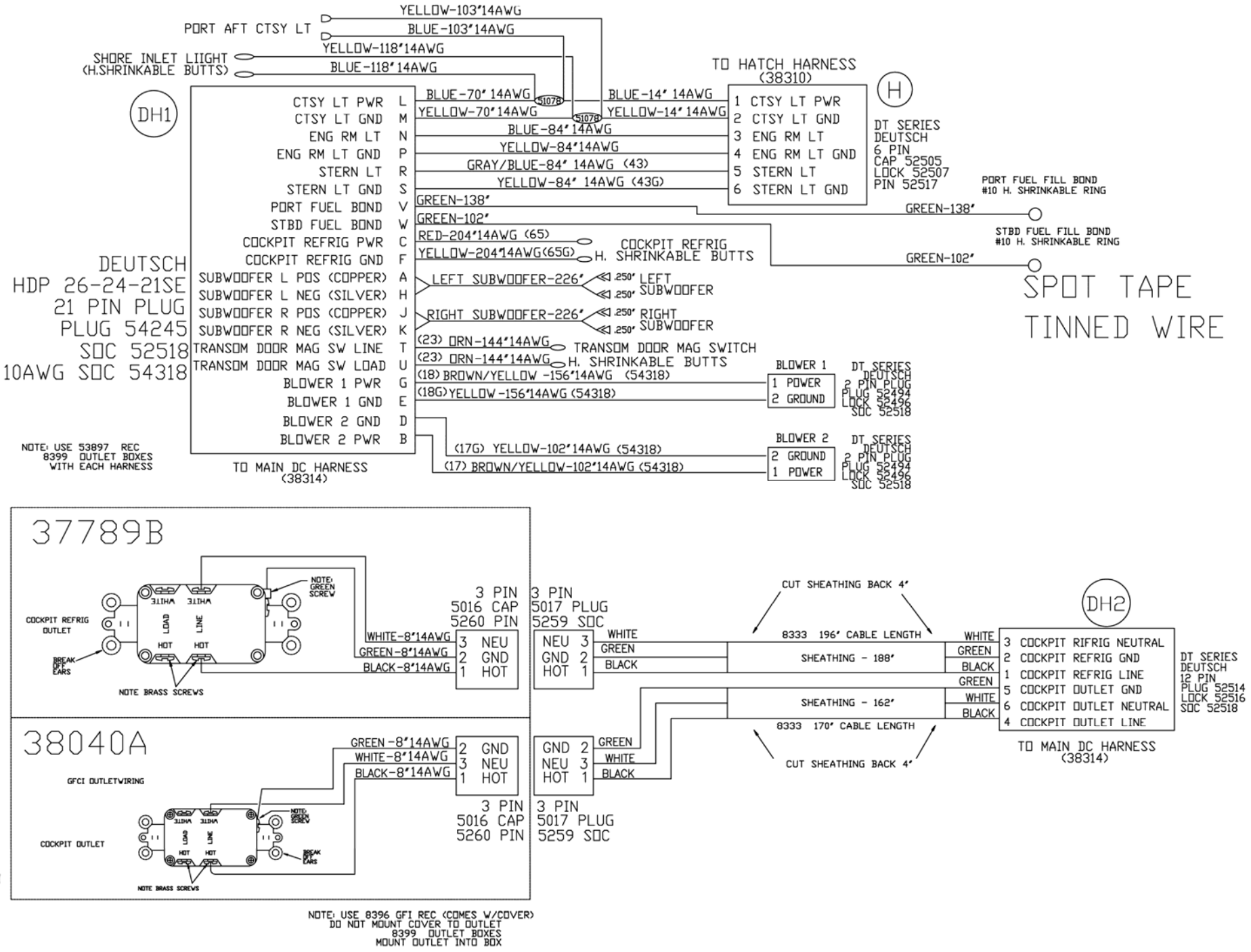

Deck Harness 120V

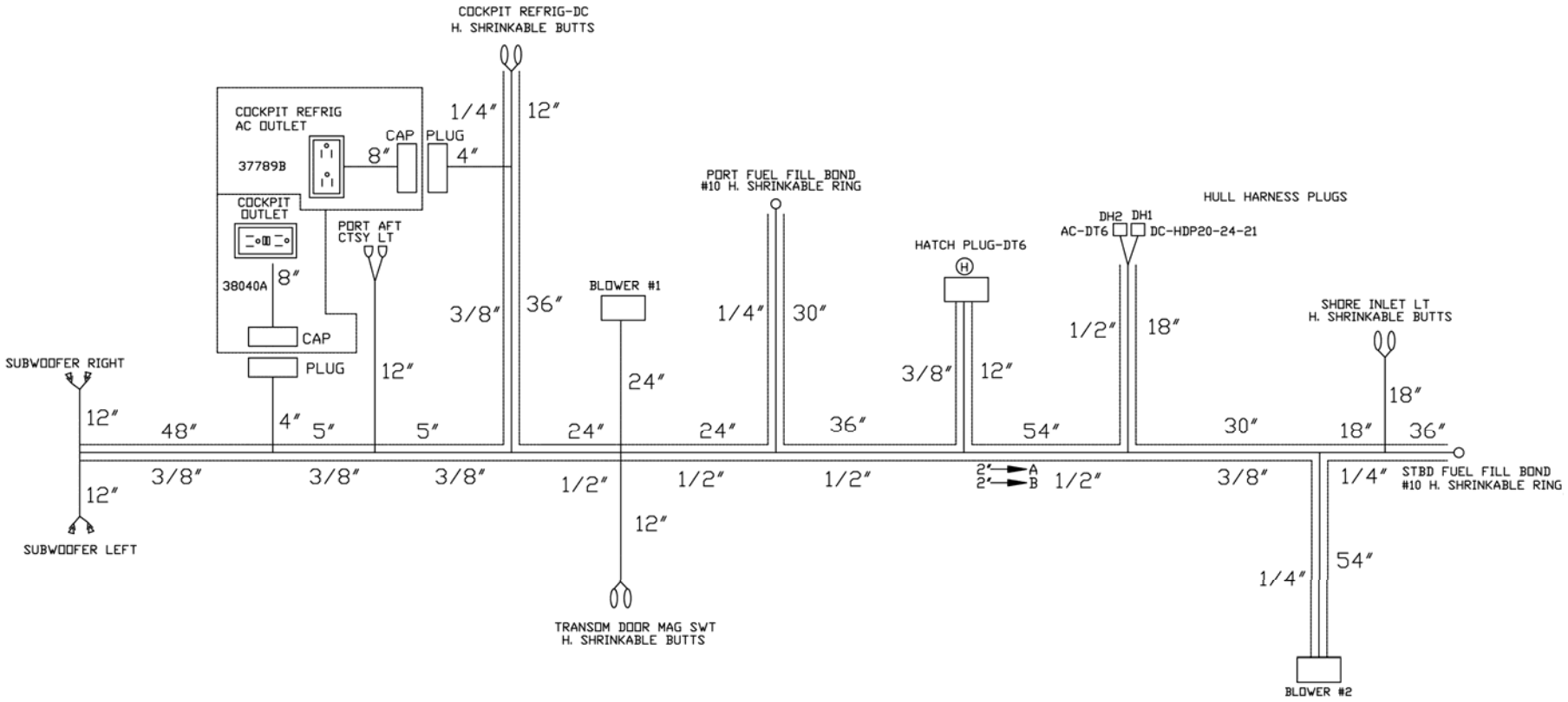

Deck Harness 120V Routing

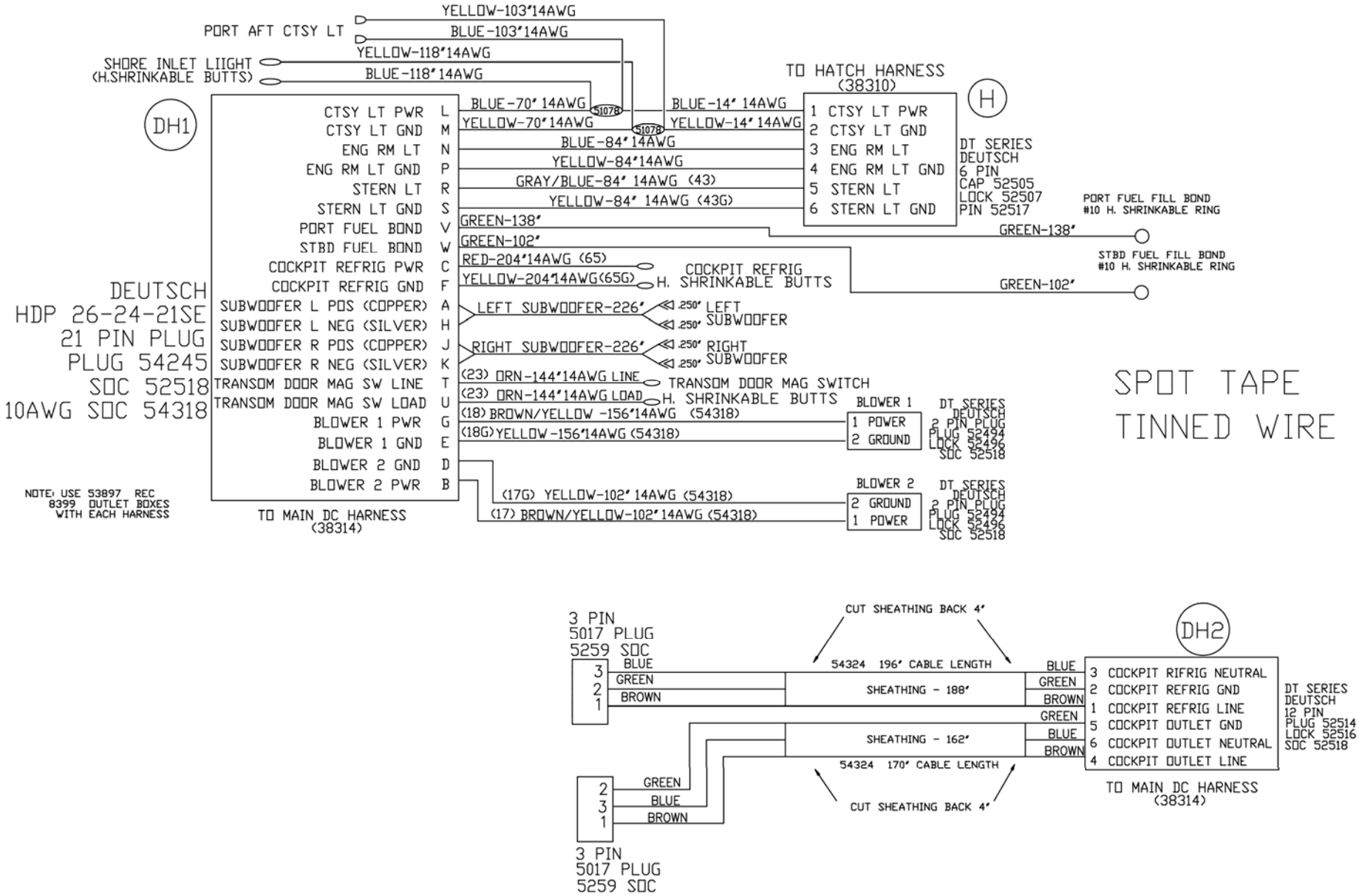

Deck Harness 220V

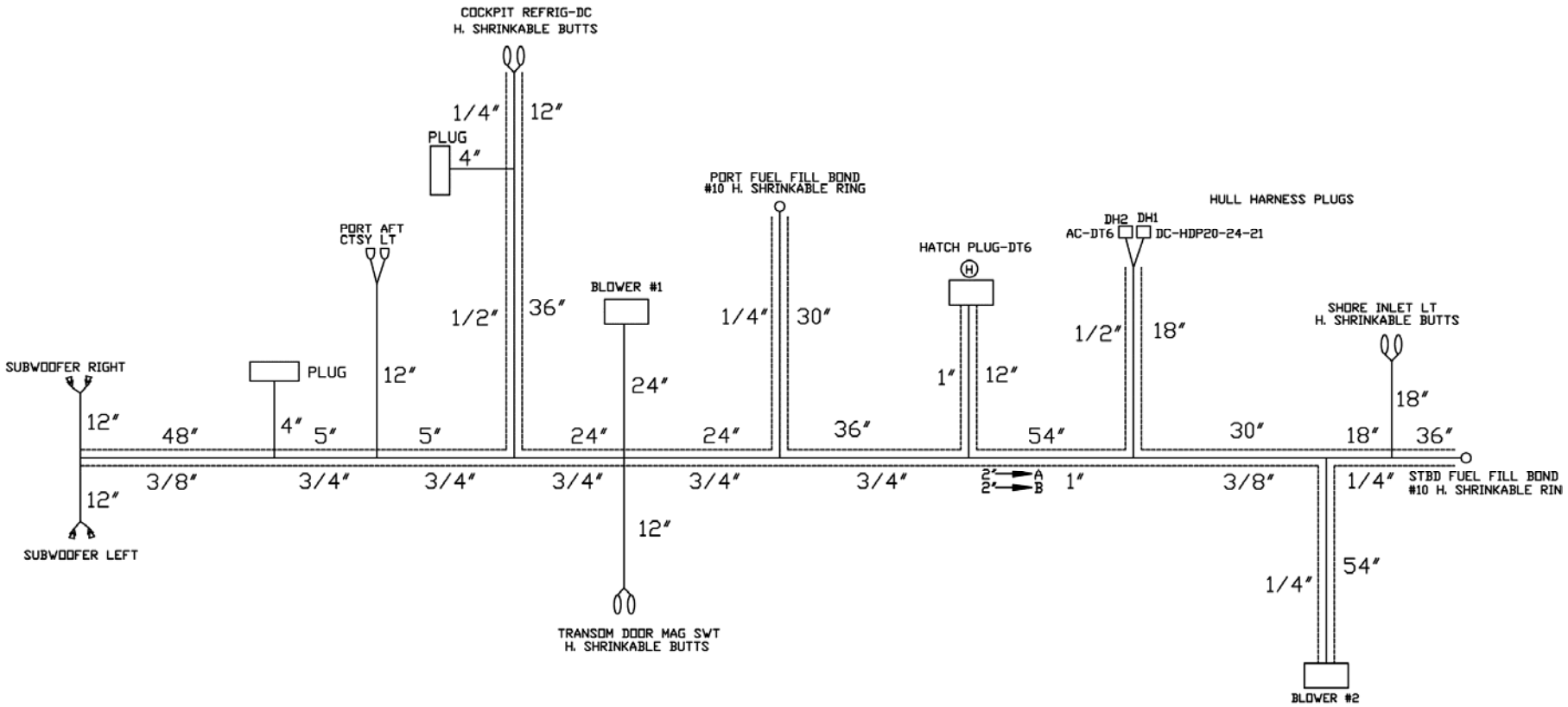

Deck Harness 220V Routing

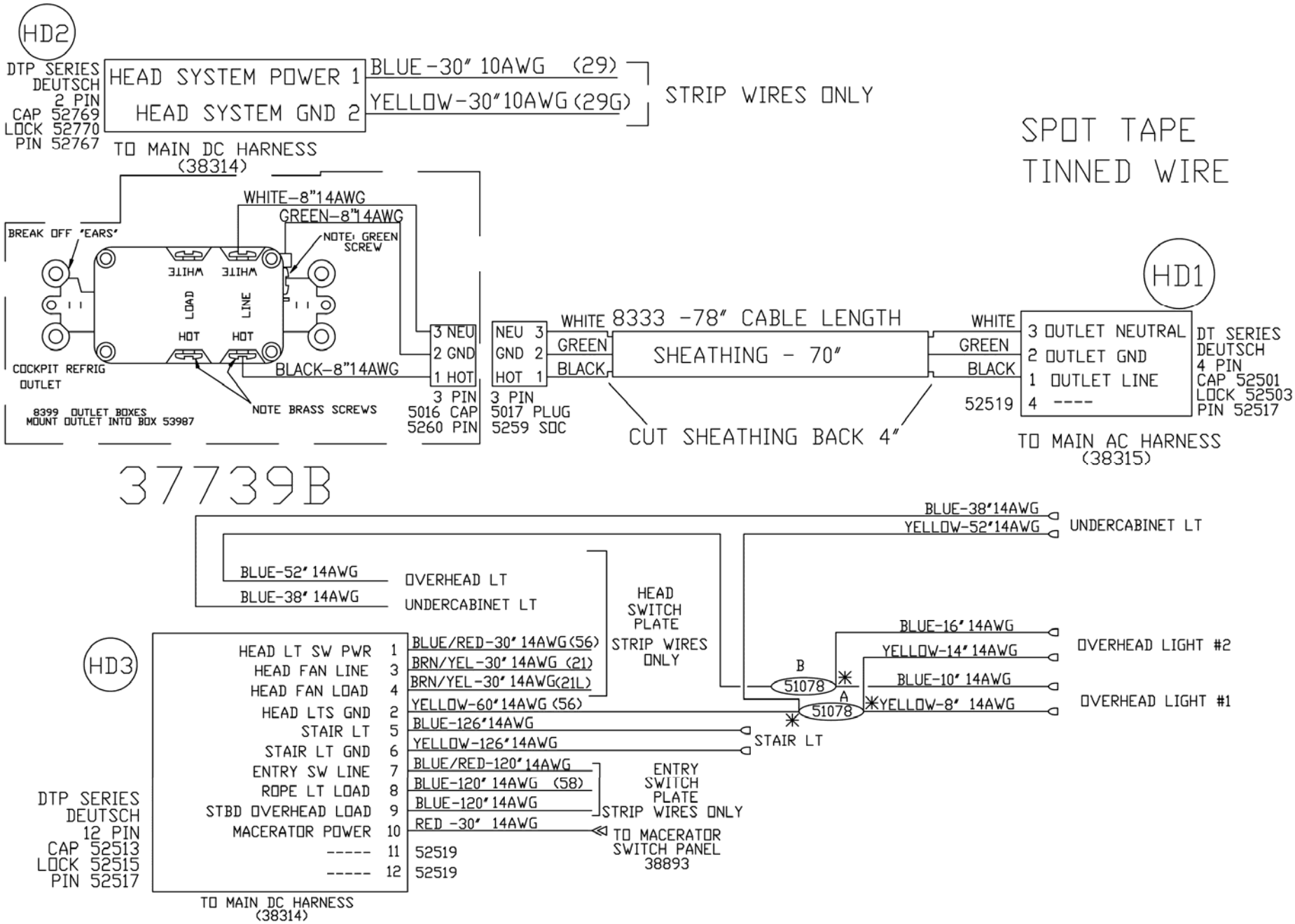

Head Harness 120V

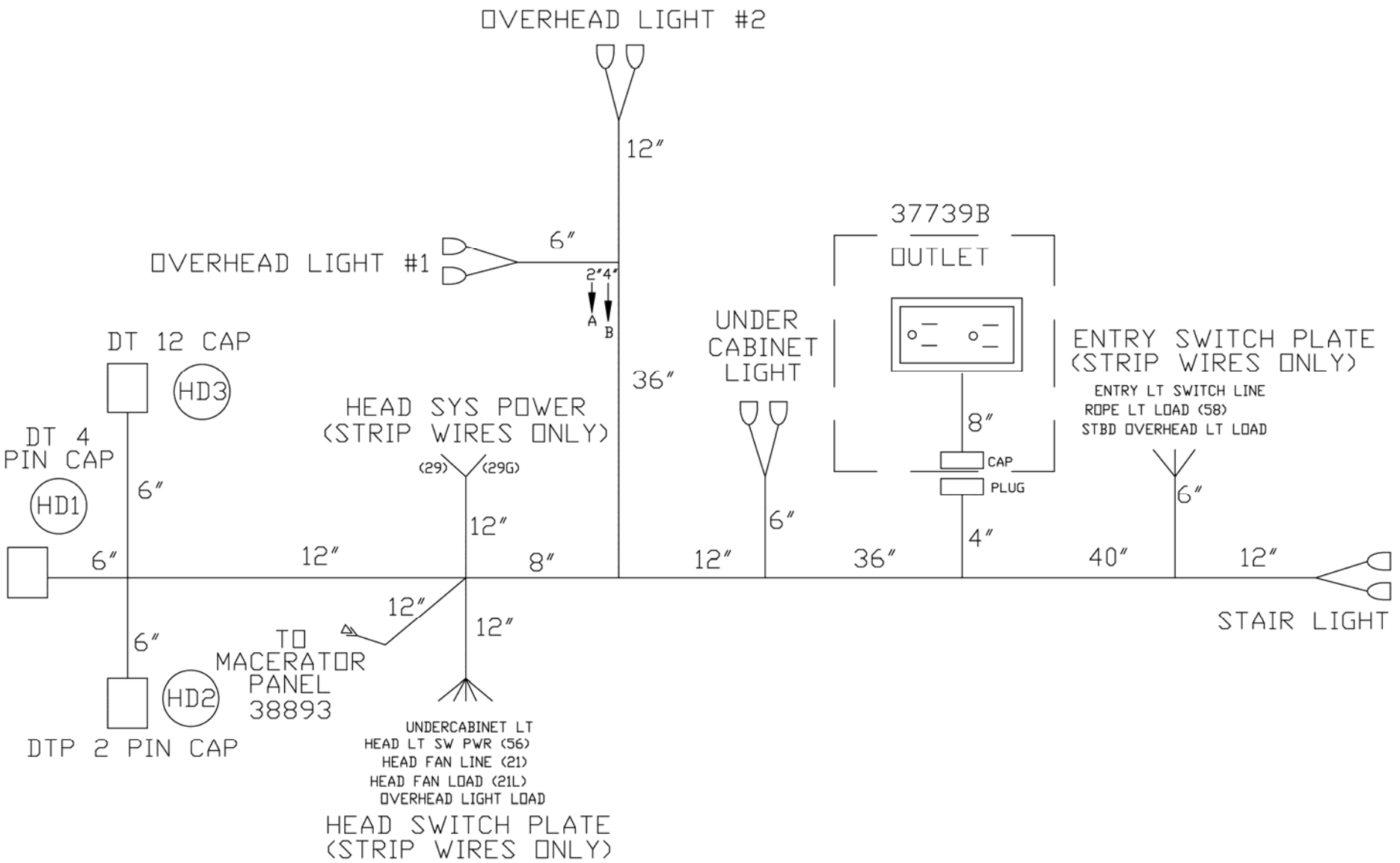

Head Harness Routing 120V

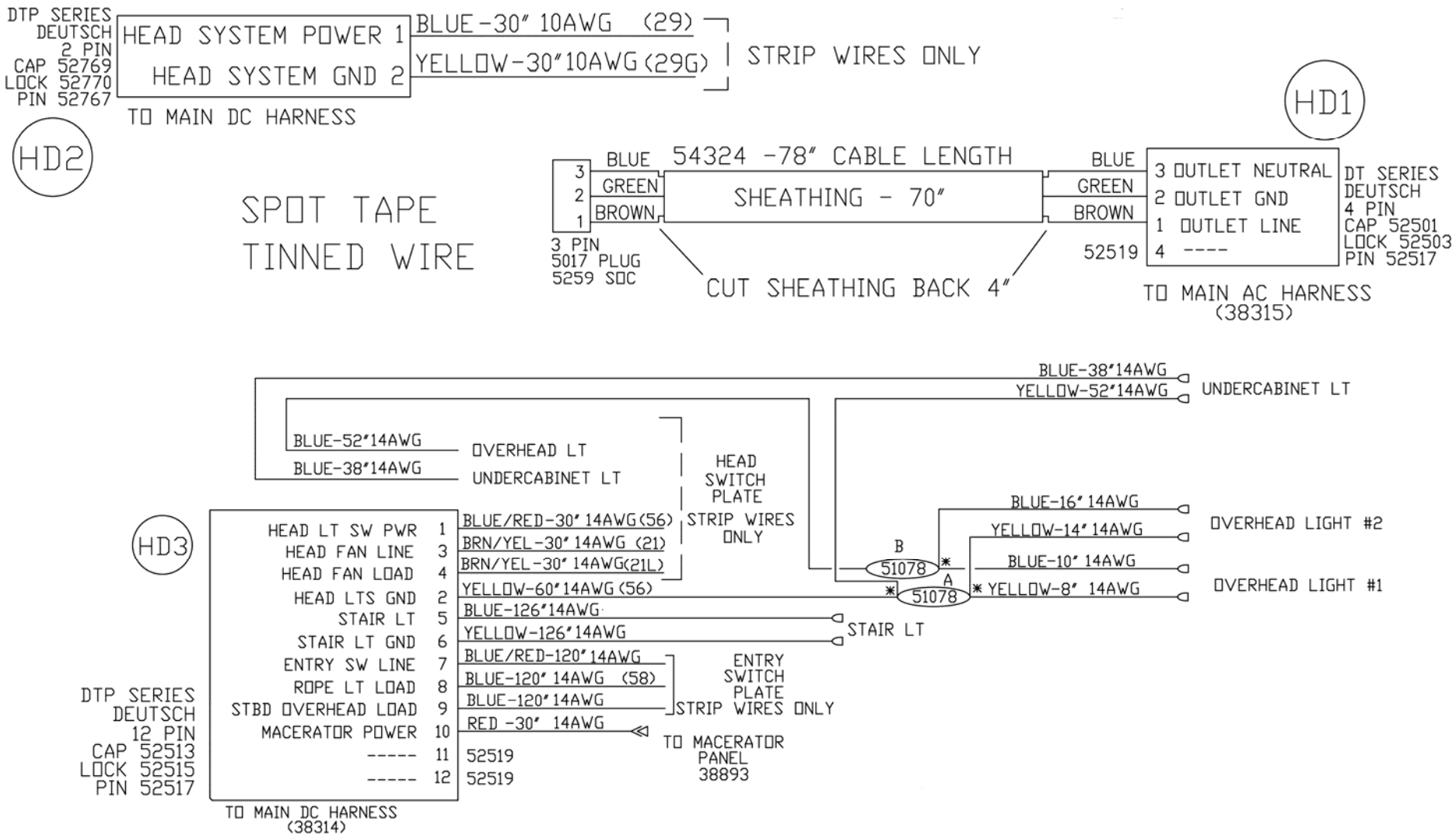

Head Harness 220V

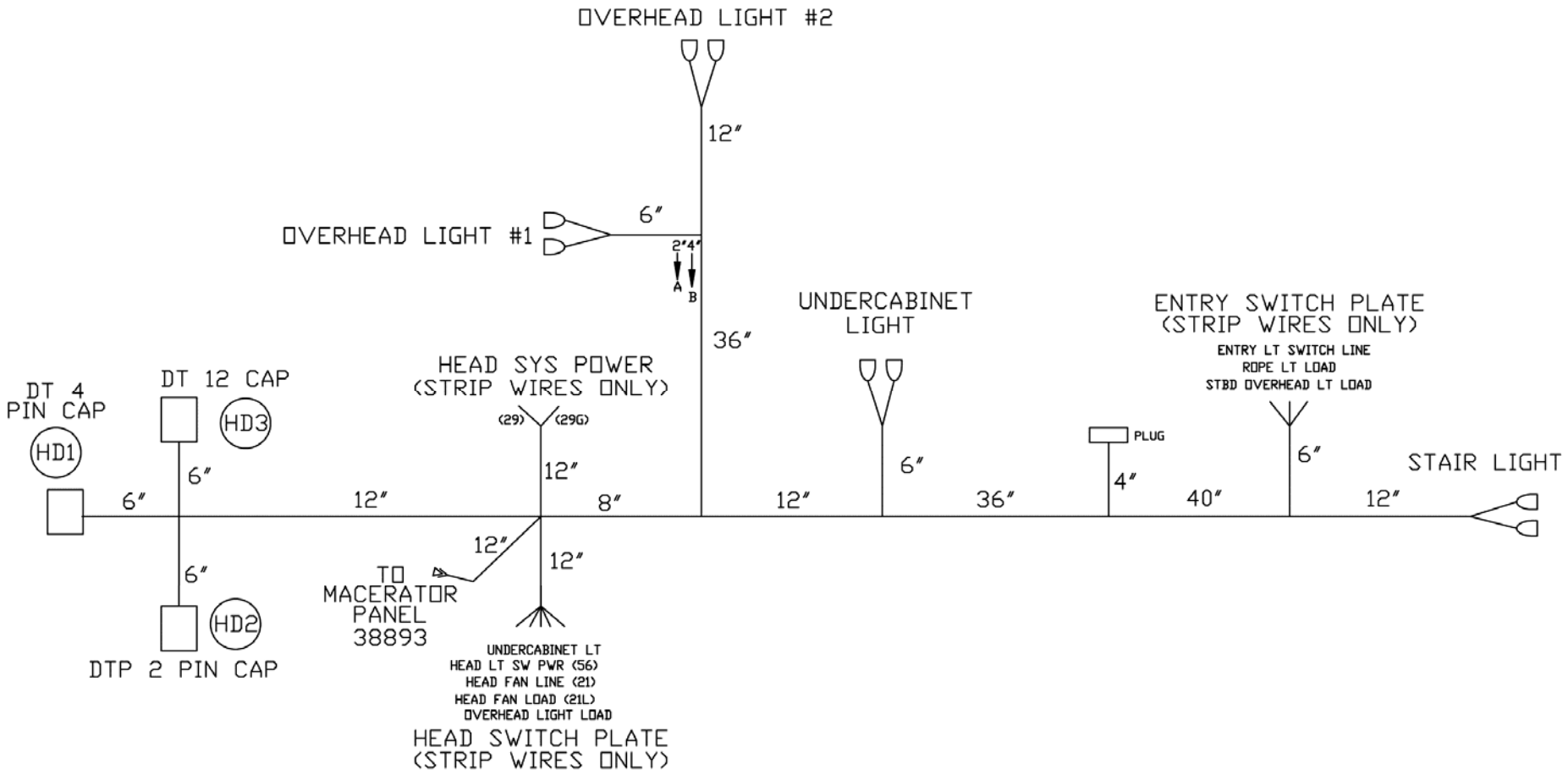

Head Harness Routing 220V

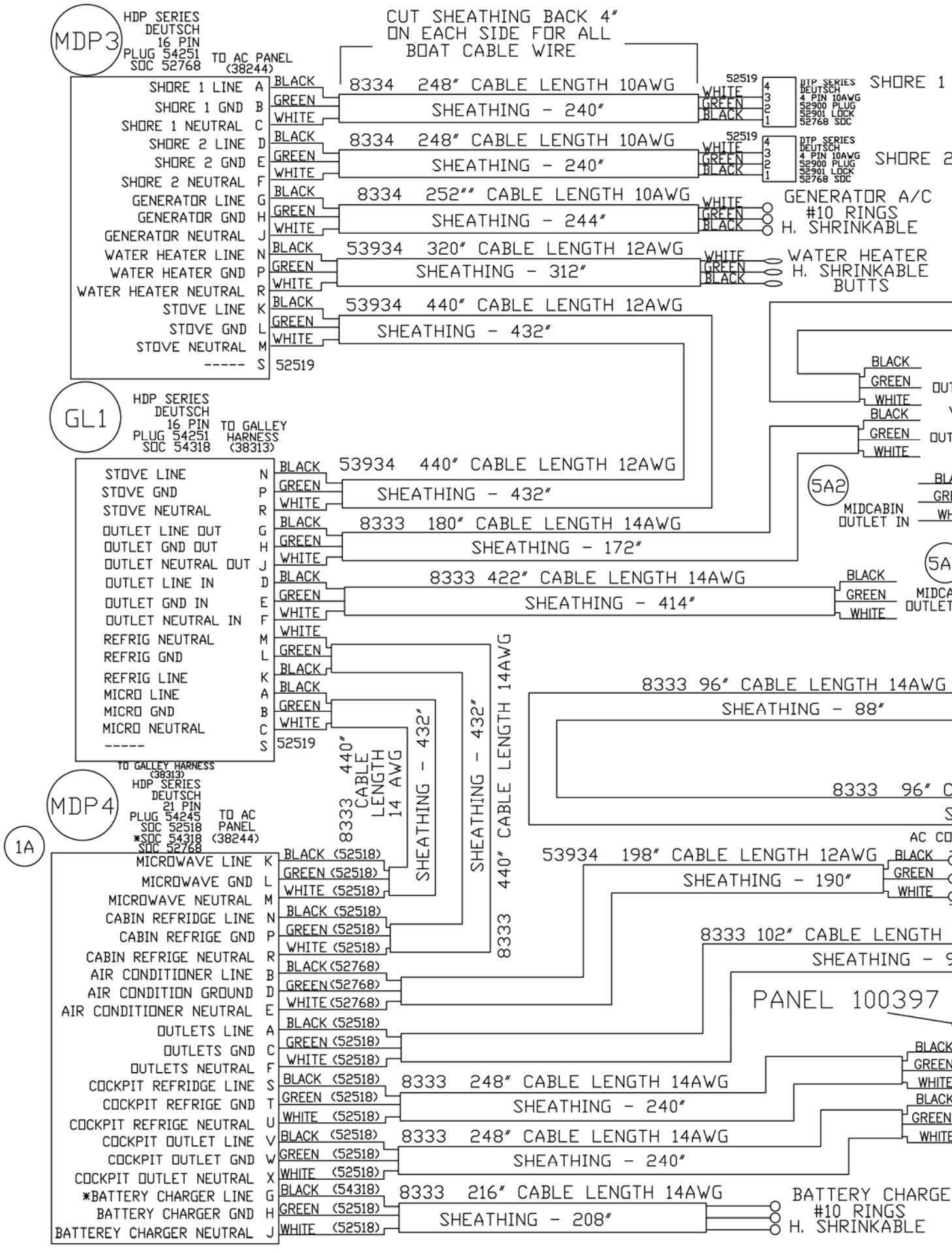
MDP3
HDP SERIES DEUTSCH 16 PIN PLUG 54251 SOC 52768 TO AC PANEL (38244)
SHORE 1 LINE A
SHORE 1 GND B
SHORE 1 NEUTRAL C
SHORE 2 LINE D
SHORE 2 GND E
SHORE 2 NEUTRAL F
GENERATOR LINE G
GENERATOR GND H
GENERATOR NEUTRAL J
WATER HEATER LINE N
WATER HEATER GND P
WATER HEATER NEUTRAL R
STOVE LINE K
STOVE GND L
STOVE NEUTRAL M
----- S
52519
CUT SHEATHING BACK 4" ON EACH SIDE FOR ALL BOAT CABLE WIRE
8334 248" CABLE LENGTH 10AWG
SHEATHING - 240"
52519
DTP SERIES DEUTSCH 4 PIN 10AWG 52900 PLUG 52901 LOCK 52768 SOC
SHORE 1
8334 248" CABLE LENGTH 10AWG
SHEATHING - 240"
SHORE 2
8334 252"" CABLE LENGTH 10AWG
SHEATHING - 244"
GENERATOR A/C #10 RINGS H. SHRINKABLE
53934 320" CABLE LENGTH 12AWG
SHEATHING - 312"
WATER HEATER H. SHRINKABLE BUTTS
53934 440" CABLE LENGTH 12AWG
SHEATHING - 432"
GL1
HDP SERIES DEUTSCH 16 PIN PLUG 54251 SOC 54318 TO GALLEY HARNESS (38313)
STOVE LINE N
STOVE GND P
STOVE NEUTRAL R
OUTLET LINE OUT G
OUTLET GND OUT H
OUTLET NEUTRAL OUT J
OUTLET LINE IN D
OUTLET GND IN E
OUTLET NEUTRAL IN F
REFRIG NEUTRAL M
REFRIG GND L
REFRIG LINE K
MICRO LINE A
MICRO GND B
MICRO NEUTRAL C
----- S
52519
53934 440" CABLE LENGTH 12AWG
SHEATHING - 432"
8333 180" CABLE LENGTH 14AWG
SHEATHING - 172"
5A2
MIDCABIN OUTLET IN
8333 422" CABLE LENGTH 14AWG
SHEATHING - 414"
5A
8333 440" CABLE LENGTH 14 AWG
SHEATHING - 432"
8333 440" CABLE LENGTH 14AWG
SHEATHING - 432"
8333 96" CABLE LENGTH 14AWG
SHEATHING - 88"
8333 96" C
MDP4
TO GALLEY HARNESS (38313)
HDP SERIES DEUTSCH 21 PIN PLUG 54245 SOC 52518 *SOC 54318 SOC 52768 TO AC PANEL (38244)
1A
MICROWAVE LINE K
MICROWAVE GND L
MICROWAVE NEUTRAL M
CABIN REFRIDGE LINE N
CABIN REFRIGE GND P
CABIN REFRIGE NEUTRAL R
AIR CONDITIONER LINE B
AIR CONDITION GROUND D
AIR CONDITIONER NEUTRAL E
OUTLETS LINE A
OUTLETS GND C
OUTLETS NEUTRAL F
COCKPIT REFRIDGE LINE S
COCKPIT REFRIGE GND T
COCKPIT REFRIGE NEUTRAL U
COCKPIT OUTLET LINE V
COCKPIT OUTLET GND W
COCKPIT OUTLET NEUTRAL X
*BATTERY CHARGER LINE G
BATTERY CHARGER GND H
BATTEREY CHARGER NEUTRAL J
53934 198" CABLE LENGTH 12AWG
SHEATHING - 190"
AC CO
8333 102" CABLE LENGTH
SHEATHING - 9
PANEL 100397
8333 248" CABLE LENGTH 14AWG
SHEATHING - 240"
8333 248" CABLE LENGTH 14AWG
SHEATHING - 240"
8333 216" CABLE LENGTH 14AWG
SHEATHING - 208"
BATTERY CHARGE #10 RINGS H. SHRINKABLE

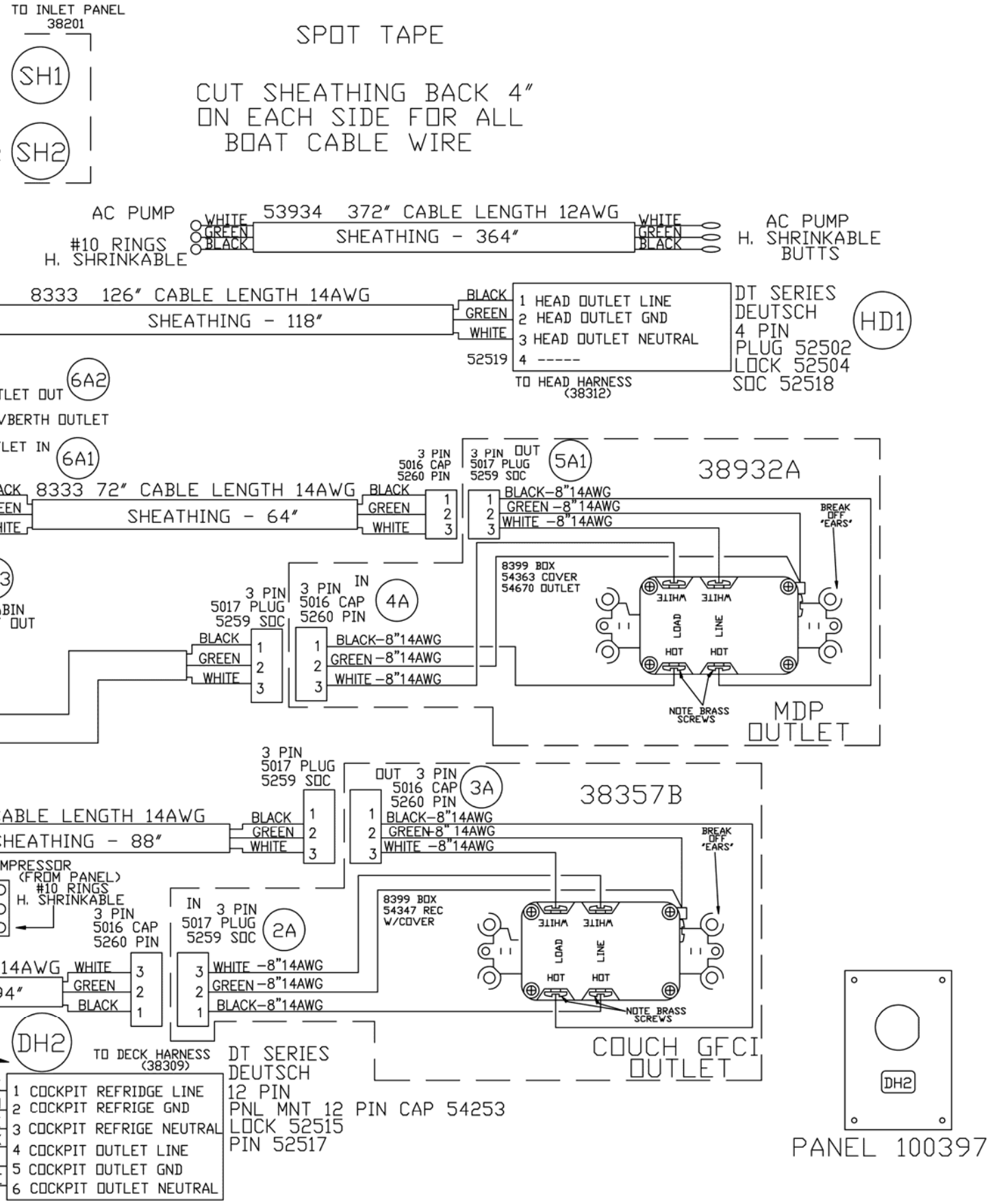

AC Hull Harness 120V 320SY

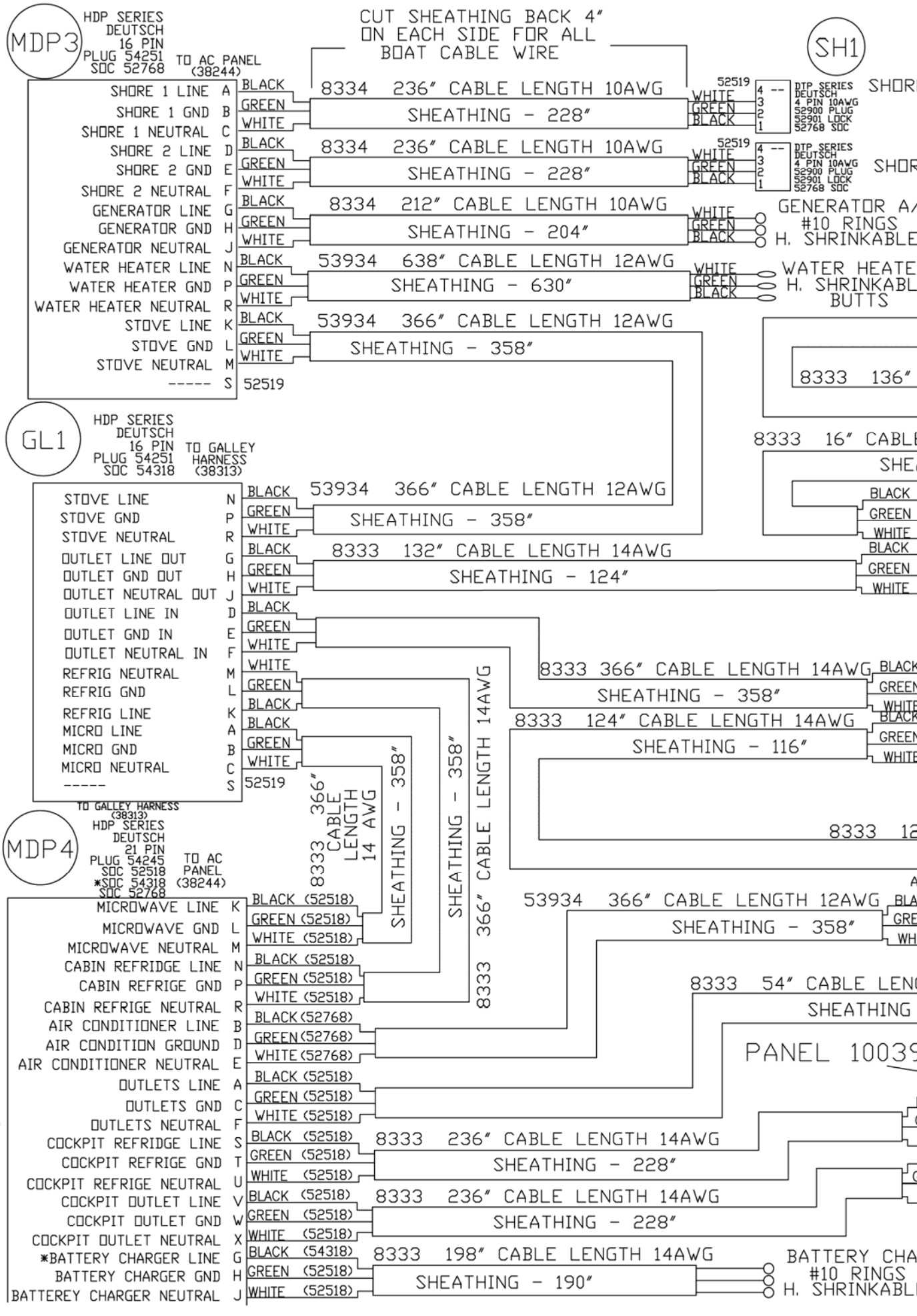
MDP3
HDP SERIES
DEUTSCH
16 PIN
PLUG 54251
SOC 52768
TO AC PANEL
(38244)
SHORE 1 LINE A
SHORE 1 GND B
SHORE 1 NEUTRAL C
SHORE 2 LINE D
SHORE 2 GND E
SHORE 2 NEUTRAL F
GENERATOR LINE G
GENERATOR GND H
GENERATOR NEUTRAL J
WATER HEATER LINE N
WATER HEATER GND P
WATER HEATER NEUTRAL R
STOVE LINE K
STOVE GND L
STOVE NEUTRAL M
----- S
52519
CUT SHEATHING BACK 4"
ON EACH SIDE FOR ALL
BOAT CABLE WIRE
SH1
8334 236" CABLE LENGTH 10AWG
SHEATHING - 228"
8334 236" CABLE LENGTH 10AWG
SHEATHING - 228"
8334 212" CABLE LENGTH 10AWG
SHEATHING - 204"
53934 638" CABLE LENGTH 12AWG
SHEATHING - 630"
53934 366" CABLE LENGTH 12AWG
SHEATHING - 358"
52519
DTP SERIES
DEUTSCH
4 PIN 10AWG
52900 PLUG
52901 LOCK
52768 SOC
GENERATOR A
#10 RINGS
H. SHRINKABLE
WATER HEATE
H. SHRINKABL
BUTTS
8333 136"
8333 16" CABLE
GL1
HDP SERIES
DEUTSCH
16 PIN
PLUG 54251
SOC 54318
TO GALLEY
HARNESS
(38313)
STOVE LINE N
STOVE GND P
STOVE NEUTRAL R
OUTLET LINE OUT G
OUTLET GND OUT H
OUTLET NEUTRAL OUT J
OUTLET LINE IN D
OUTLET GND IN E
OUTLET NEUTRAL IN F
REFRIG NEUTRAL M
REFRIG GND L
REFRIG LINE K
MICRO LINE A
MICRO GND B
MICRO NEUTRAL C
----- S
52519
53934 366" CABLE LENGTH 12AWG
SHEATHING - 358"
8333 132" CABLE LENGTH 14AWG
SHEATHING - 124"
8333 366" CABLE LENGTH 14AWG
SHEATHING - 358"
8333 124" CABLE LENGTH 14AWG
SHEATHING - 116"
8333 366" CABLE LENGTH 14AWG
SHEATHING - 358"
8333 366" CABLE LENGTH 14AWG
SHEATHING - 358"
8333 12
MDP4
TO GALLEY HARNESS
(38313)
HDP SERIES
DEUTSCH
21 PIN
PLUG 54245
SOC 52518
*SOC 54318
SOC 52768
TO AC
PANEL
(38244)
MICROWAVE LINE K
MICROWAVE GND L
MICROWAVE NEUTRAL M
CABIN REFRIDGE LINE N
CABIN REFRIGE GND P
CABIN REFRIGE NEUTRAL R
AIR CONDITIONER LINE B
AIR CONDITION GROUND D
AIR CONDITIONER NEUTRAL E
OUTLETS LINE A
OUTLETS GND C
OUTLETS NEUTRAL F
COCKPIT REFRIDGE LINE S
COCKPIT REFRIGE GND T
COCKPIT REFRIGE NEUTRAL U
COCKPIT OUTLET LINE V
COCKPIT OUTLET GND W
COCKPIT OUTLET NEUTRAL X
*BATTERY CHARGER LINE G
BATTERY CHARGER GND H
BATTEREY CHARGER NEUTRAL J
8333 366" CABLE LENGTH 14 AWG
SHEATHING - 358"
8333 366" CABLE LENGTH 14AWG
SHEATHING - 358"
53934 366" CABLE LENGTH 12AWG
SHEATHING - 358"
8333 54" CABLE LENG
SHEATHING
PANEL 10039
8333 236" CABLE LENGTH 14AWG
SHEATHING - 228"
8333 236" CABLE LENGTH 14AWG
SHEATHING - 228"
8333 198" CABLE LENGTH 14AWG
SHEATHING - 190"
BATTERY CHA
#10 RINGS
H. SHRINKABL

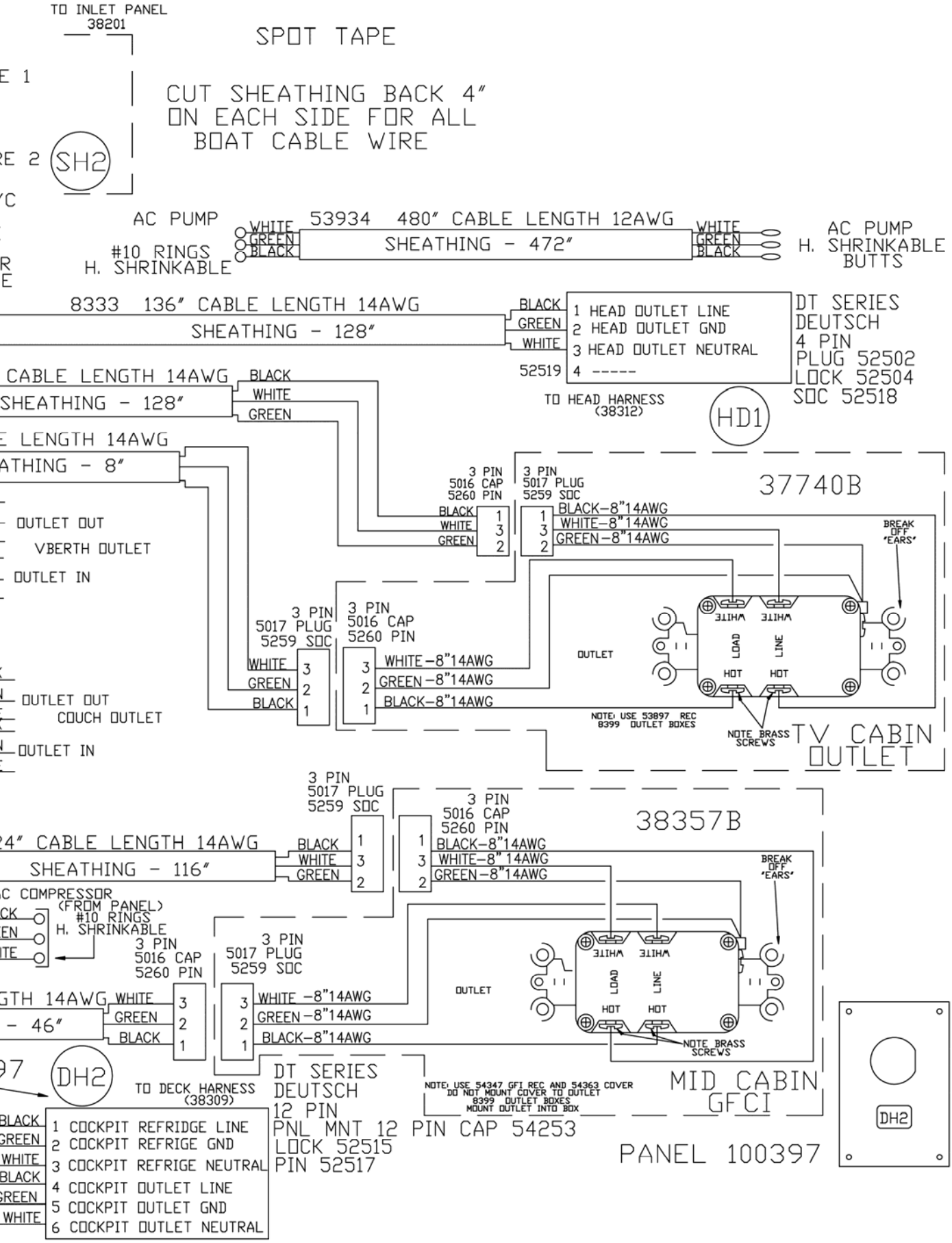

AC Hull Harness 120V 340SY

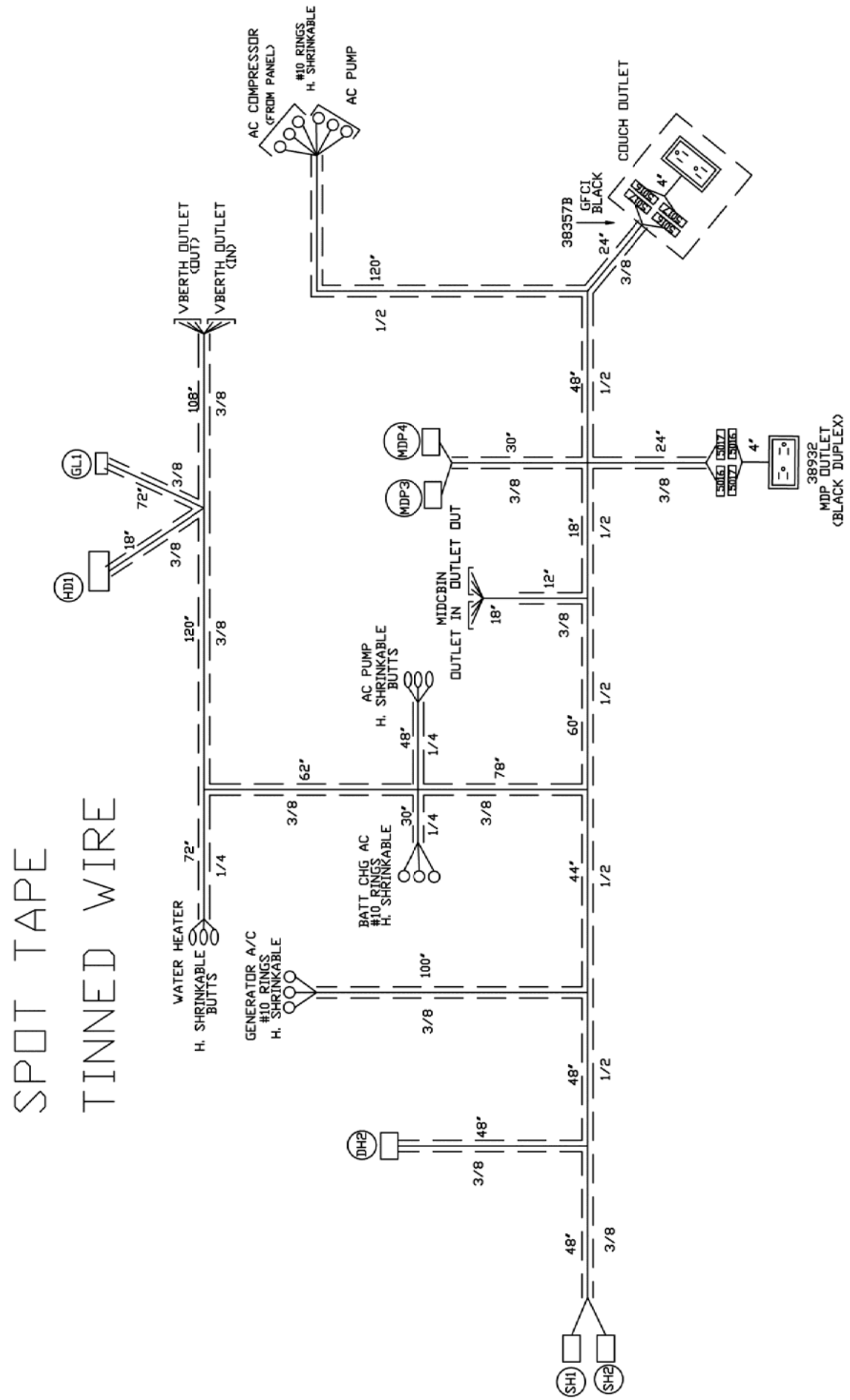

AC Hull Harness 120V Routing 320SY

SPOT TAPE

TINNED WIRE

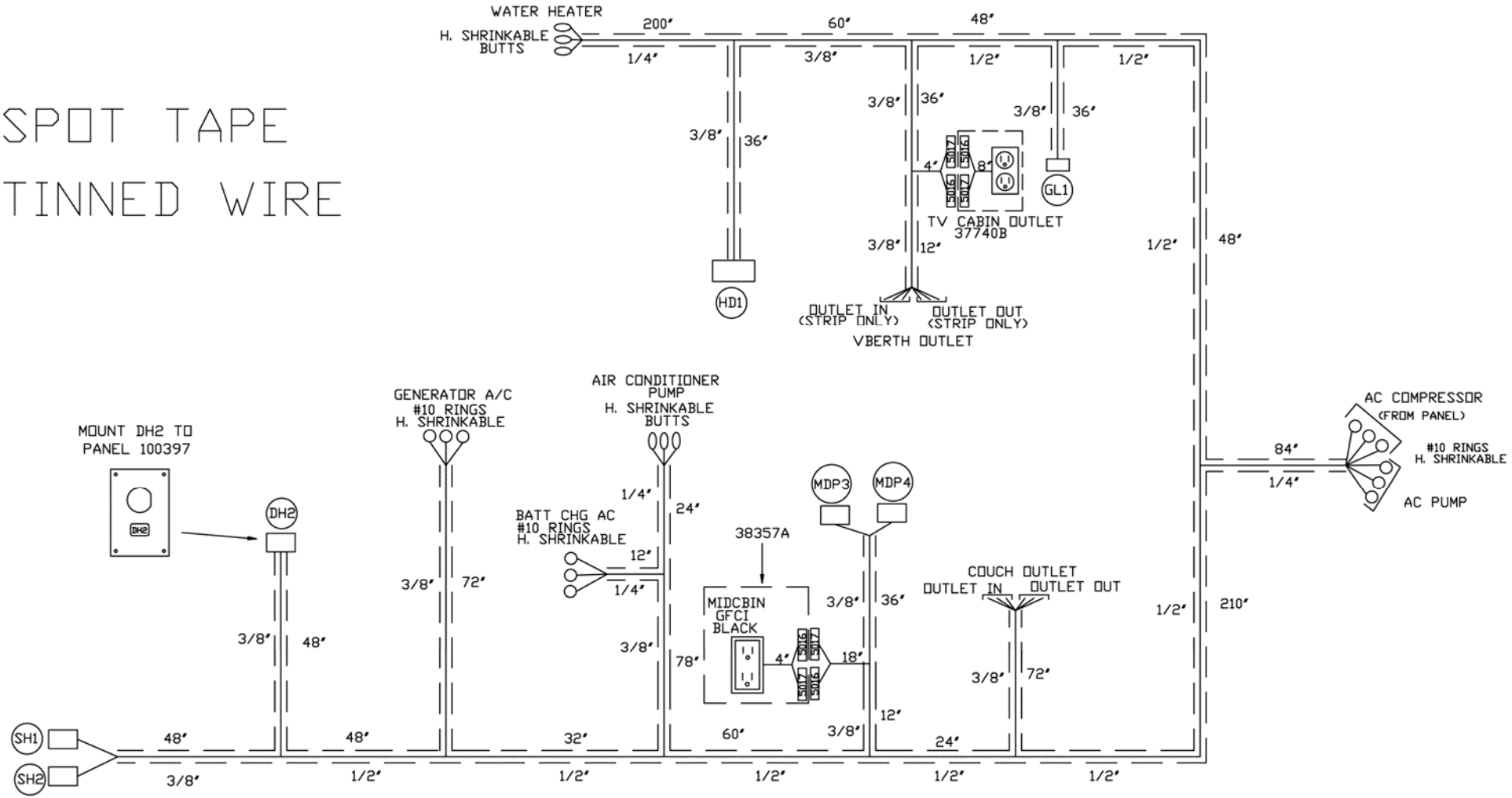

AC Hull Harness 120V Routing 340SY

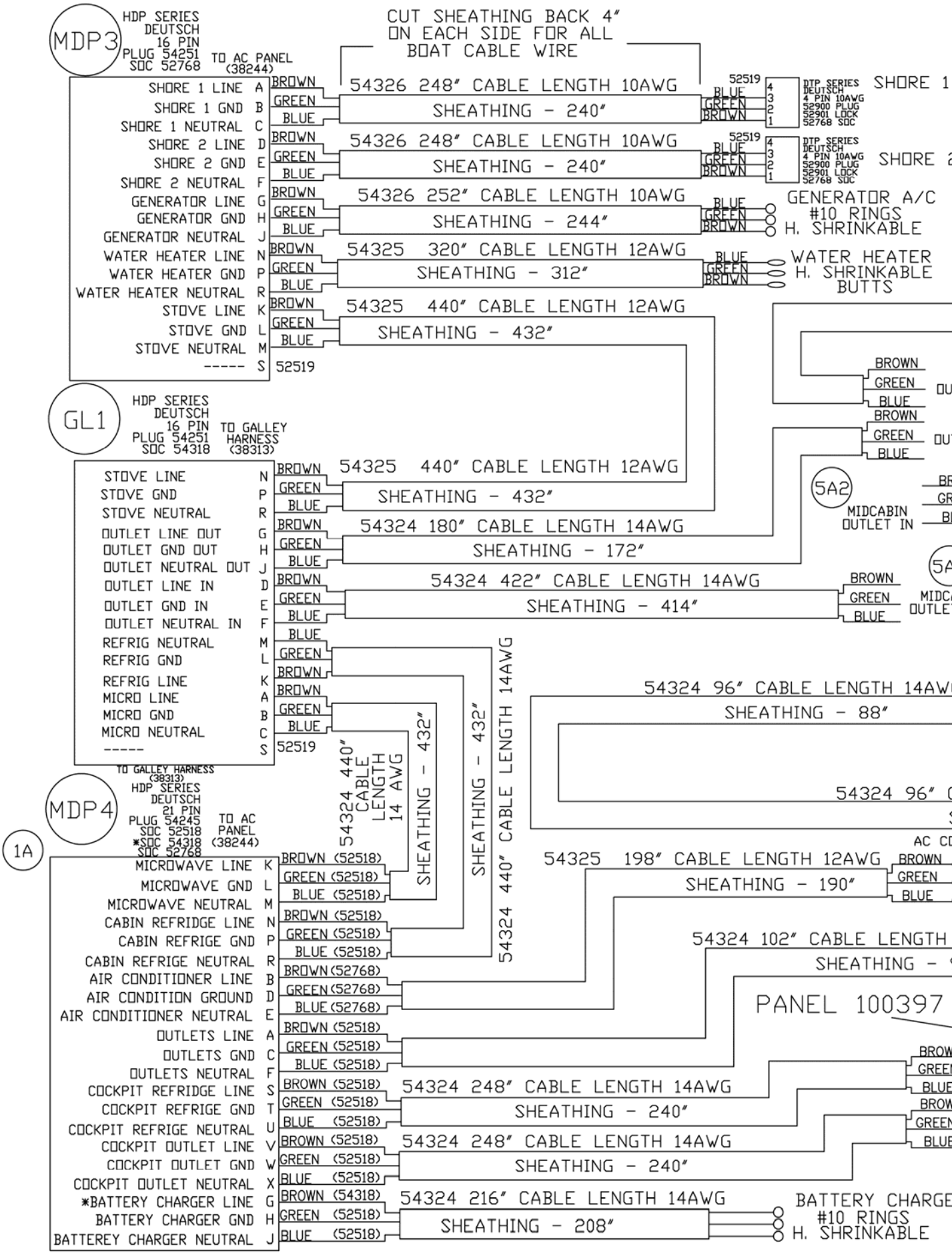
MDP3
HDP SERIES DEUTSCH 16 PIN PLUG 54251 SOC 52768
TO AC PANEL (38244)
CUT SHEATHING BACK 4" ON EACH SIDE FOR ALL BOAT CABLE WIRE
SHORE 1 LINE A
SHORE 1 GND B
SHORE 1 NEUTRAL C
SHORE 2 LINE D
SHORE 2 GND E
SHORE 2 NEUTRAL F
GENERATOR LINE G
GENERATOR GND H
GENERATOR NEUTRAL J
WATER HEATER LINE N
WATER HEATER GND P
WATER HEATER NEUTRAL R
STOVE LINE K
STOVE GND L
STOVE NEUTRAL M
----- S
52519
BROWN
GREEN
BLUE
54326 248" CABLE LENGTH 10AWG
SHEATHING - 240"
54326 248" CABLE LENGTH 10AWG
SHEATHING - 240"
54326 252" CABLE LENGTH 10AWG
SHEATHING - 244"
54325 320" CABLE LENGTH 12AWG
SHEATHING - 312"
54325 440" CABLE LENGTH 12AWG
SHEATHING - 432"
DTP SERIES DEUTSCH 4 PIN 10AWG 52900 PLUG 52901 LOCK 52768 SOC
SHORE 1
SHORE 2
GENERATOR A/C #10 RINGS H. SHRINKABLE
WATER HEATER H. SHRINKABLE BUTTS
GL1
HDP SERIES DEUTSCH 16 PIN PLUG 54251 SOC 54318
TO GALLEY HARNESS (38313)
STOVE LINE N
STOVE GND P
STOVE NEUTRAL R
OUTLET LINE OUT G
OUTLET GND OUT H
OUTLET NEUTRAL OUT J
OUTLET LINE IN D
OUTLET GND IN E
OUTLET NEUTRAL IN F
REFRIG NEUTRAL M
REFRIG GND L
REFRIG LINE K
MICRO LINE A
MICRO GND B
MICRO NEUTRAL C
----- S
52519
54325 440" CABLE LENGTH 12AWG
SHEATHING - 432"
54324 180" CABLE LENGTH 14AWG
SHEATHING - 172"
54324 422" CABLE LENGTH 14AWG
SHEATHING - 414"
5A2
MIDCABIN OUTLET IN
54324 440" CABLE LENGTH 14 AWG
SHEATHING - 432"
54324 440" CABLE LENGTH 14AWG
SHEATHING - 432"
54324 96" CABLE LENGTH 14AWG
SHEATHING - 88"
54324 96"
AC CO
MDP4
TO GALLEY HARNESS (38313)
HDP SERIES DEUTSCH 21 PIN PLUG 54245 SOC 52518 *SOC 54318 SOC 52768
TO AC PANEL (38244)
1A
MICROWAVE LINE K
MICROWAVE GND L
MICROWAVE NEUTRAL M
CABIN REFRIDGE LINE N
CABIN REFRIGE GND P
CABIN REFRIGE NEUTRAL R
AIR CONDITIONER LINE B
AIR CONDITION GROUND D
AIR CONDITIONER NEUTRAL E
OUTLETS LINE A
OUTLETS GND C
OUTLETS NEUTRAL F
COCKPIT REFRIDGE LINE S
COCKPIT REFRIGE GND T
COCKPIT REFRIGE NEUTRAL U
COCKPIT OUTLET LINE V
COCKPIT OUTLET GND W
COCKPIT OUTLET NEUTRAL X
*BATTERY CHARGER LINE G
BATTERY CHARGER GND H
BATTEREY CHARGER NEUTRAL J
BROWN (52518)
GREEN (52518)
BLUE (52518)
BROWN (52768)
GREEN (52768)
BLUE (52768)
BROWN (54318)
54325 198" CABLE LENGTH 12AWG
SHEATHING - 190"
54324 102" CABLE LENGTH
SHEATHING -
PANEL 100397
54324 248" CABLE LENGTH 14AWG
SHEATHING - 240"
54324 248" CABLE LENGTH 14AWG
SHEATHING - 240"
54324 216" CABLE LENGTH 14AWG
SHEATHING - 208"
BATTERY CHARGE
#10 RINGS
H. SHRINKABLE

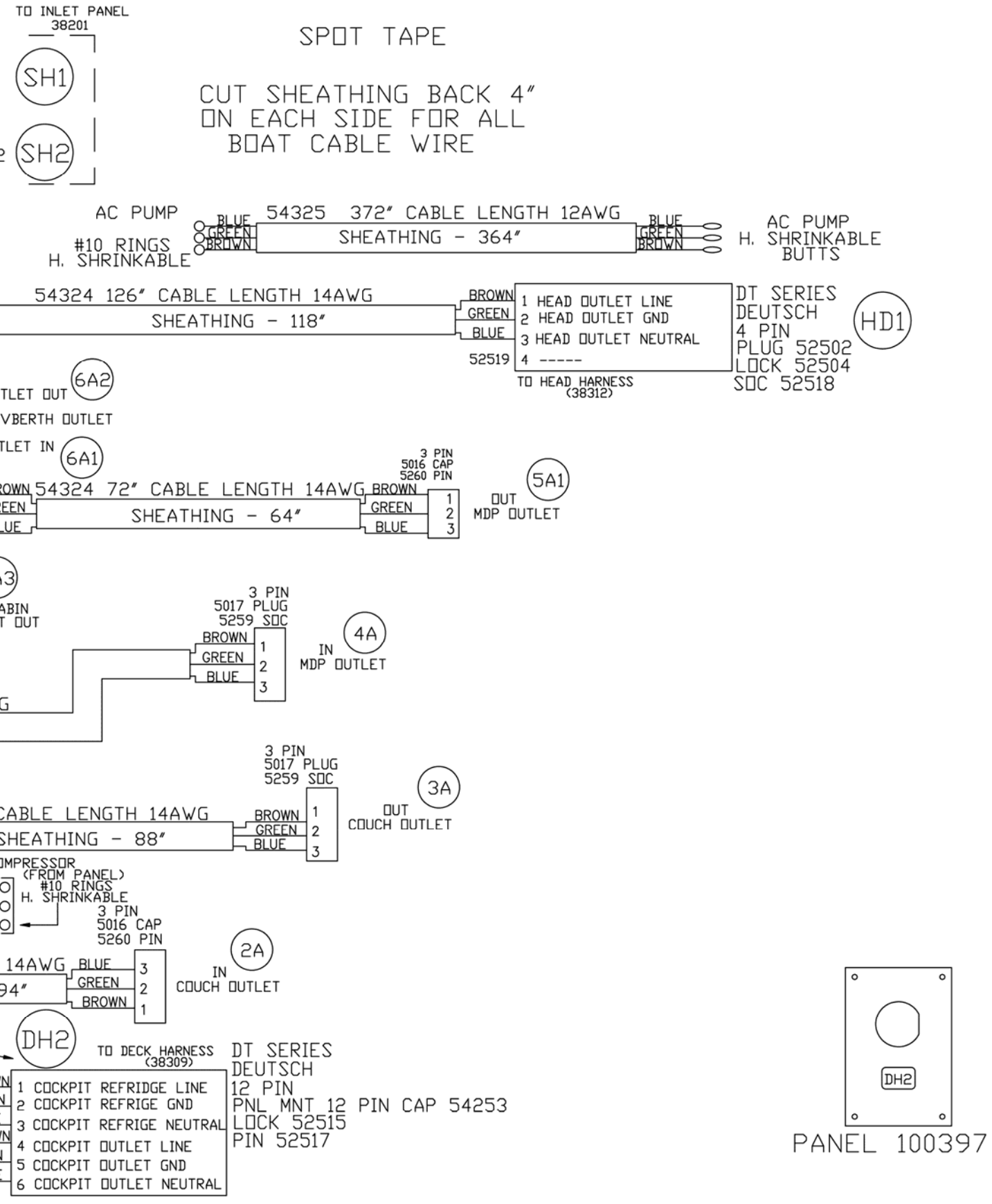

AC Hull Harness 220V 335 SY

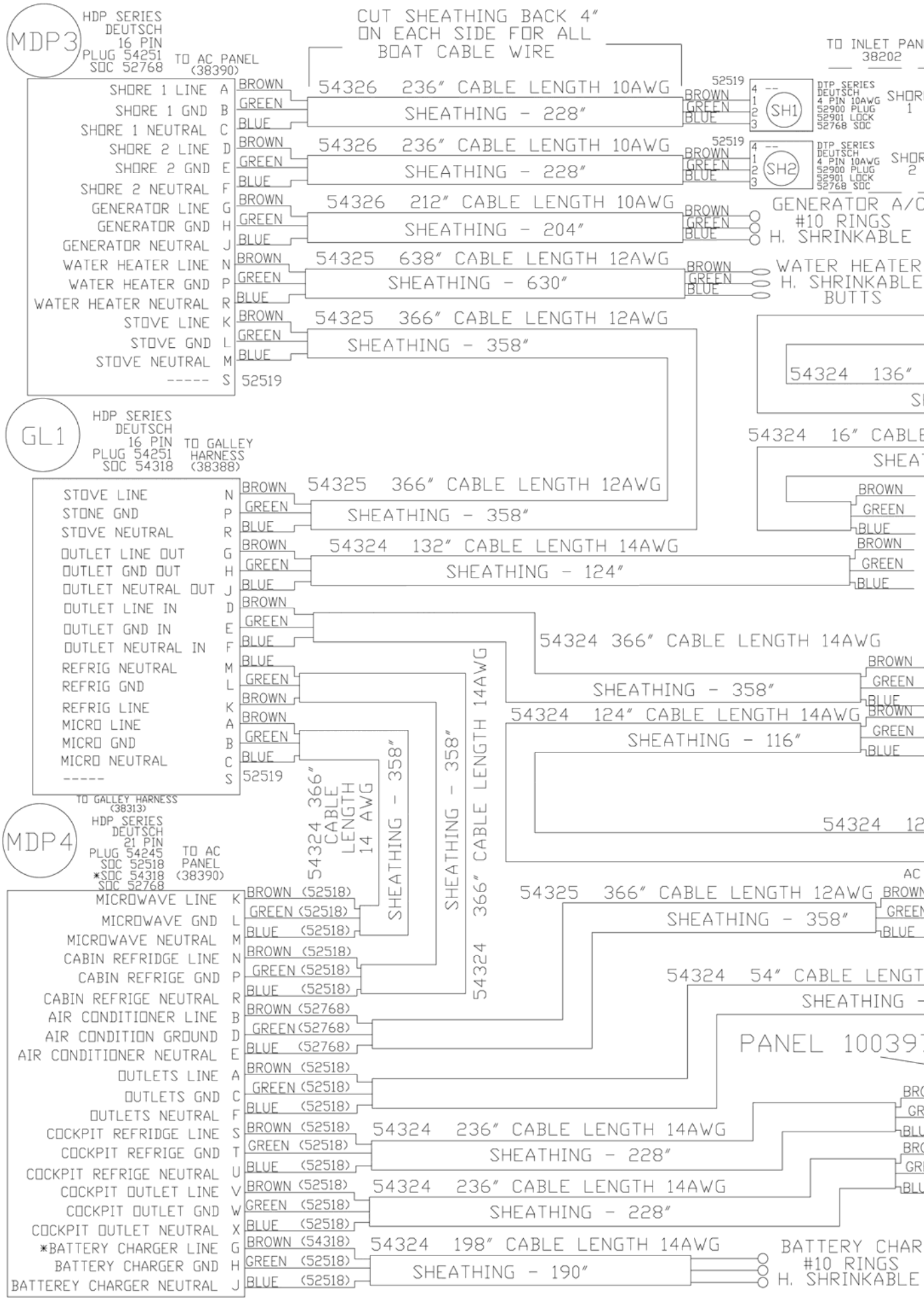
MDP3
HDP SERIES DEUTSCH 16 PIN PLUG 54251 SOC 52768
TO AC PANEL (38390)
SHORE 1 LINE A
SHORE 1 GND B
SHORE 1 NEUTRAL C
SHORE 2 LINE D
SHORE 2 GND E
SHORE 2 NEUTRAL F
GENERATOR LINE G
GENERATOR GND H
GENERATOR NEUTRAL J
WATER HEATER LINE N
WATER HEATER GND P
WATER HEATER NEUTRAL R
STOVE LINE K
STOVE GND L
STOVE NEUTRAL M
----- S
52519
CUT SHEATHING BACK 4" ON EACH SIDE FOR ALL BOAT CABLE WIRE
54326 236" CABLE LENGTH 10AWG
SHEATHING - 228"
54326 236" CABLE LENGTH 10AWG
SHEATHING - 228"
54326 212" CABLE LENGTH 10AWG
SHEATHING - 204"
54325 638" CABLE LENGTH 12AWG
SHEATHING - 630"
54325 366" CABLE LENGTH 12AWG
SHEATHING - 358"
BROWN
GREEN
BLUE
52519
SH1
SH2
DTP SERIES DEUTSCH 4 PIN 10AWG 52900 PLUG 52901 LOCK 52768 SOC
TO INLET PAN 38202
SHOR 1
SHOR 2
GENERATOR A/C
#10 RINGS
H. SHRINKABLE
WATER HEATER
H. SHRINKABLE
BUTTS
54324 136"
54324 16" CABLE
SHEA
GL1
HDP SERIES DEUTSCH 16 PIN PLUG 54251 SOC 54318
TO GALLEY HARNESS (38388)
STOVE LINE N
STONE GND P
STOVE NEUTRAL R
OUTLET LINE OUT G
OUTLET GND OUT H
OUTLET NEUTRAL OUT J
OUTLET LINE IN D
OUTLET GND IN E
OUTLET NEUTRAL IN F
REFRIG NEUTRAL M
REFRIG GND L
REFRIG LINE K
MICRO LINE A
MICRO GND B
MICRO NEUTRAL C
----- S
52519
54325 366" CABLE LENGTH 12AWG
SHEATHING - 358"
54324 132" CABLE LENGTH 14AWG
SHEATHING - 124"
54324 366" CABLE LENGTH 14AWG
SHEATHING - 358"
54324 124" CABLE LENGTH 14AWG
SHEATHING - 116"
54324 12
54324 366" CABLE LENGTH 14 AWG
SHEATHING - 358"
SHEATHING - 358"
54324 366" CABLE LENGTH 14AWG
MDP4
HDP SERIES DEUTSCH 21 PIN PLUG 54245 SOC 52518 *SOC 54318 SOC 52768
TO GALLEY HARNESS (38313)
TO AC PANEL (38390)
MICROWAVE LINE K
MICROWAVE GND L
MICROWAVE NEUTRAL M
CABIN REFRIDGE LINE N
CABIN REFRIGE GND P
CABIN REFRIGE NEUTRAL R
AIR CONDITIONER LINE B
AIR CONDITION GROUND D
AIR CONDITIONER NEUTRAL E
OUTLETS LINE A
OUTLETS GND C
OUTLETS NEUTRAL F
COCKPIT REFRIDGE LINE S
COCKPIT REFRIGE GND T
COCKPIT REFRIGE NEUTRAL U
COCKPIT OUTLET LINE V
COCKPIT OUTLET GND W
COCKPIT OUTLET NEUTRAL X
*BATTERY CHARGER LINE G
BATTERY CHARGER GND H
BATTEREY CHARGER NEUTRAL J
(52518)
(52768)
(54318)
54325 366" CABLE LENGTH 12AWG
SHEATHING - 358"
54324 54" CABLE LENGT
SHEATHING -
PANEL 10039
54324 236" CABLE LENGTH 14AWG
SHEATHING - 228"
54324 236" CABLE LENGTH 14AWG
SHEATHING - 228"
54324 198" CABLE LENGTH 14AWG
SHEATHING - 190"
BATTERY CHAR
#10 RINGS
H. SHRINKABLE

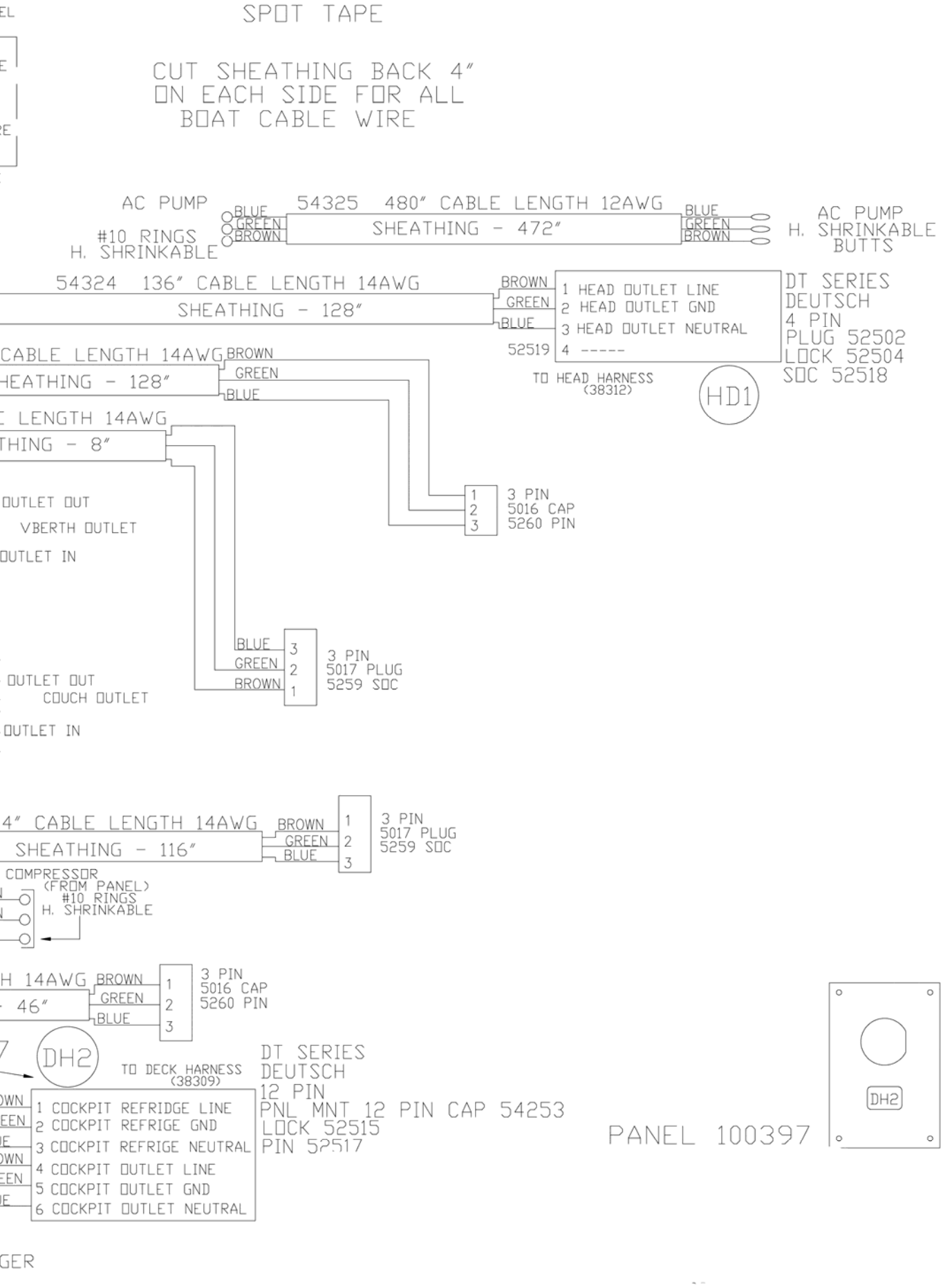

AC Hull Harness 220V 355 SY

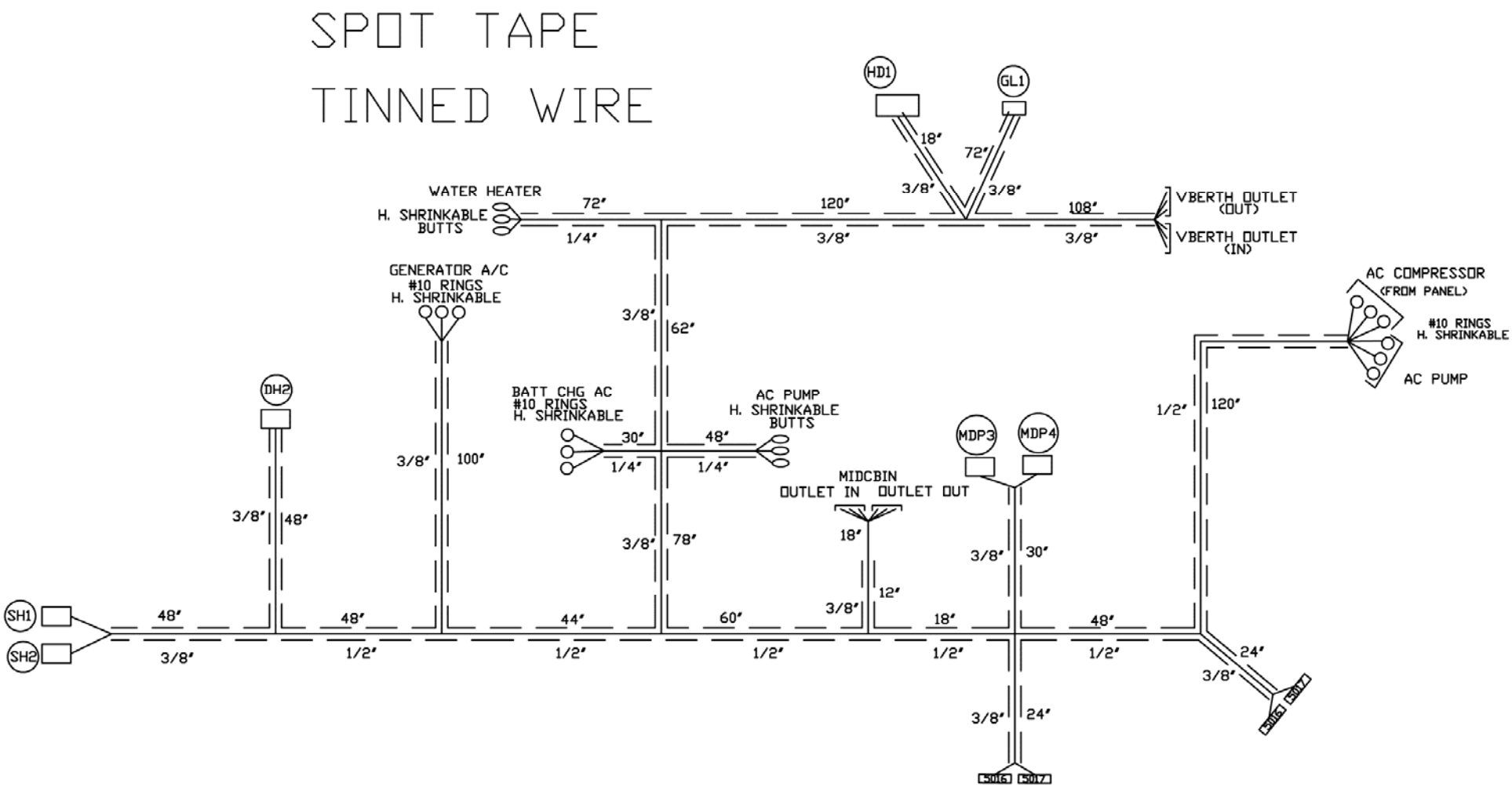

AC Hull Harness 220V Routing 335 SY

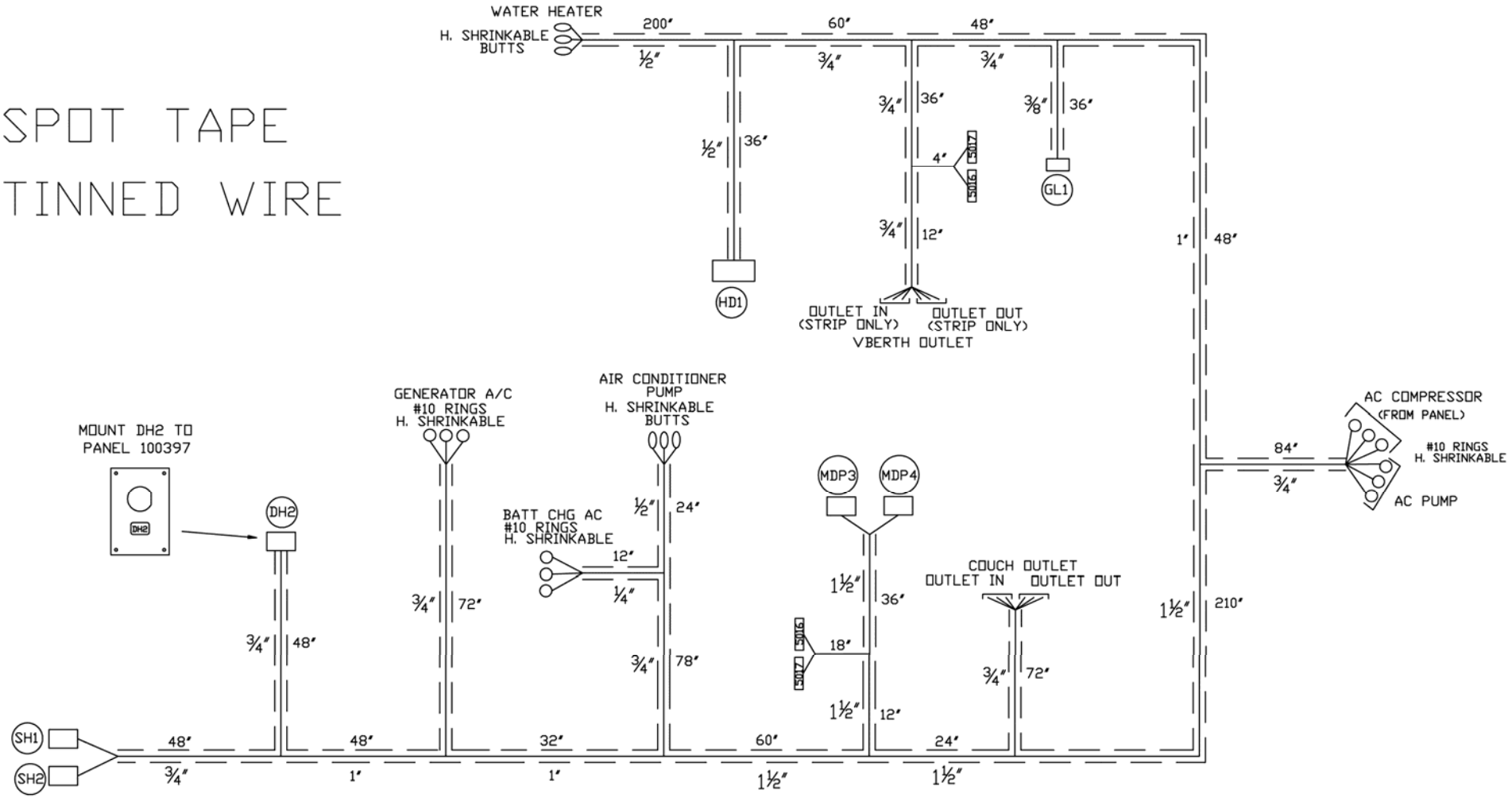

AC Hull Harness 220V Routing 355 SY

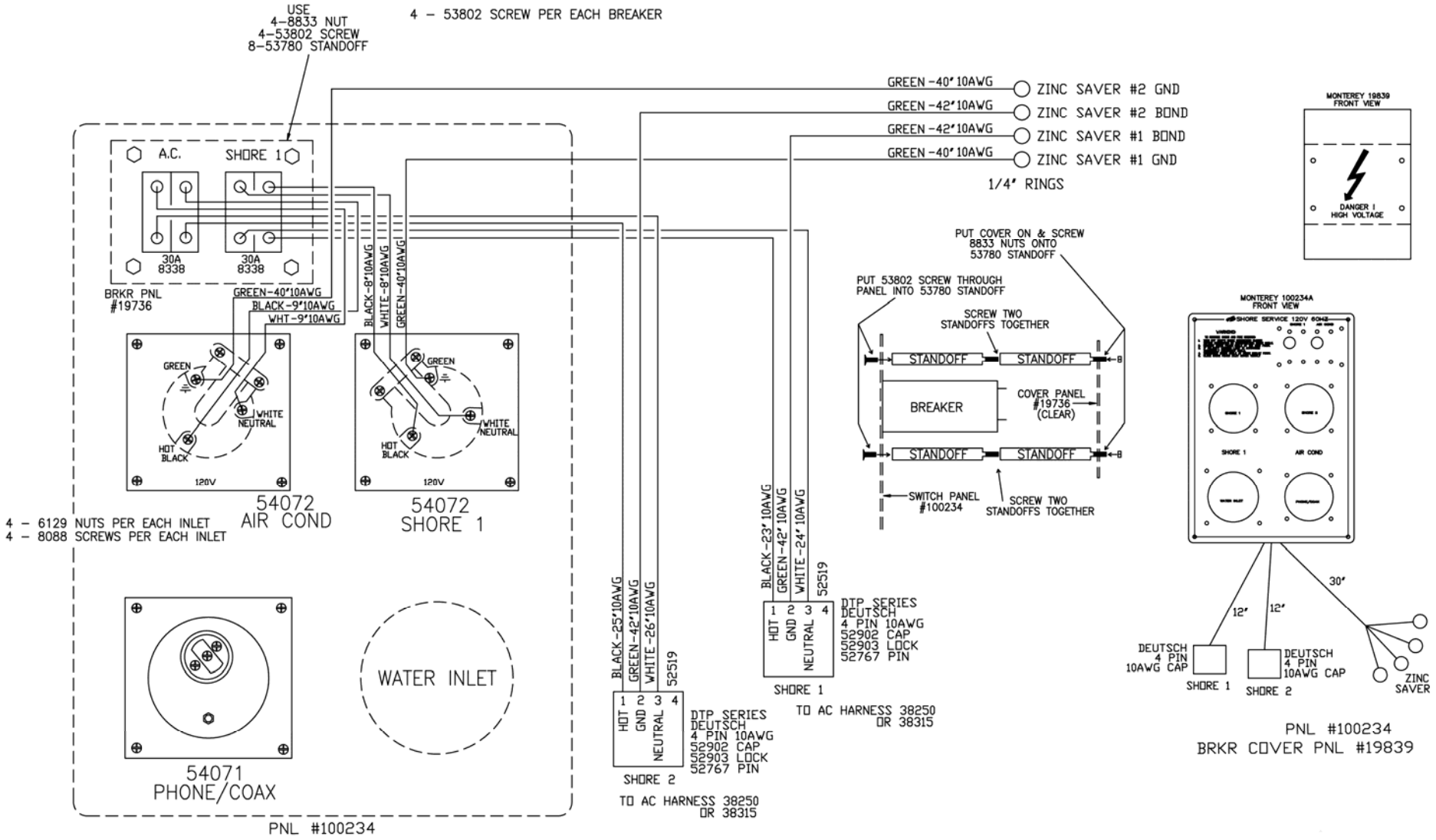

Shore Inlet Panel 120V

AC WIRE

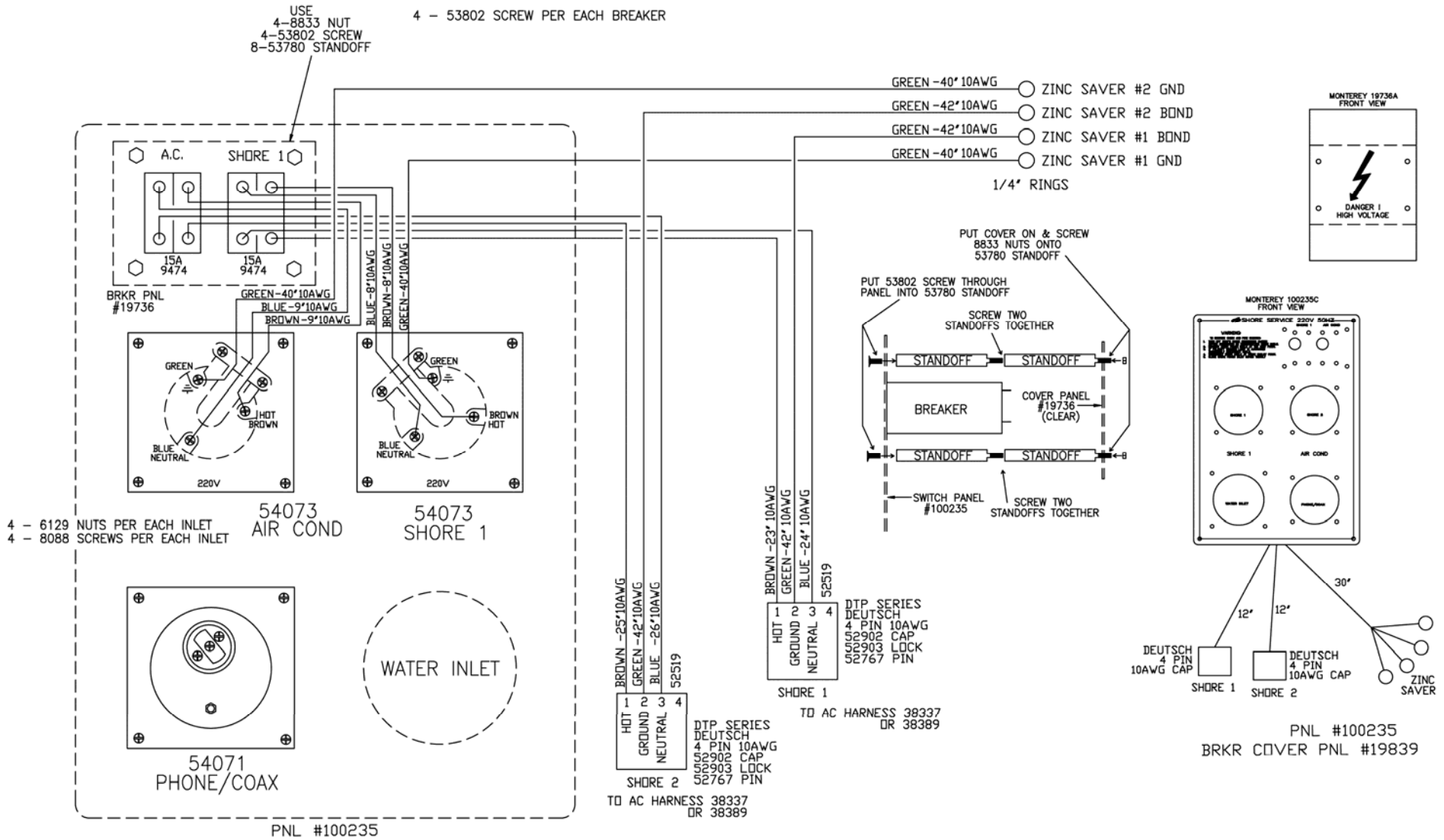

Shore Inlet Panel 220V

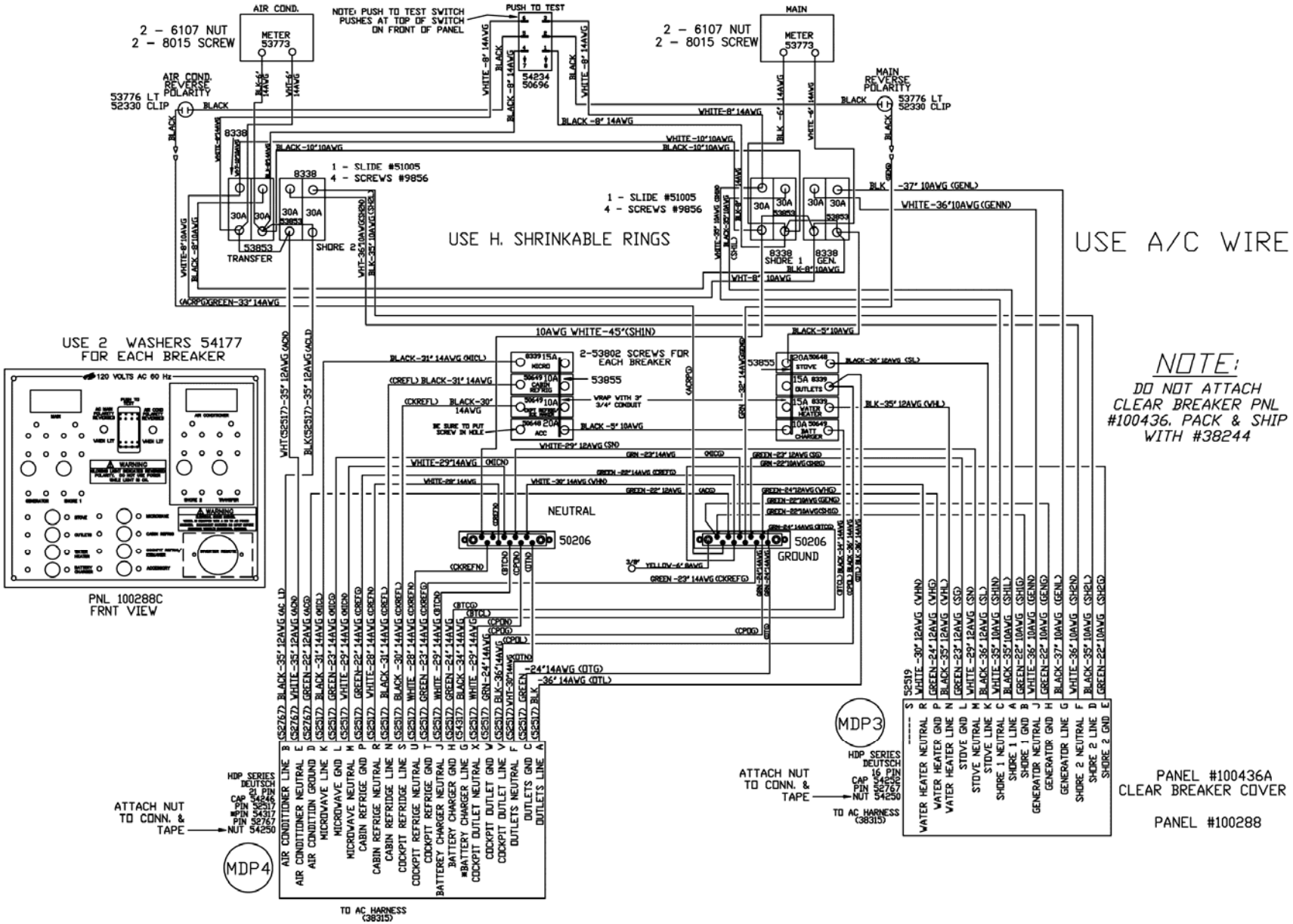

AC Panel 120V

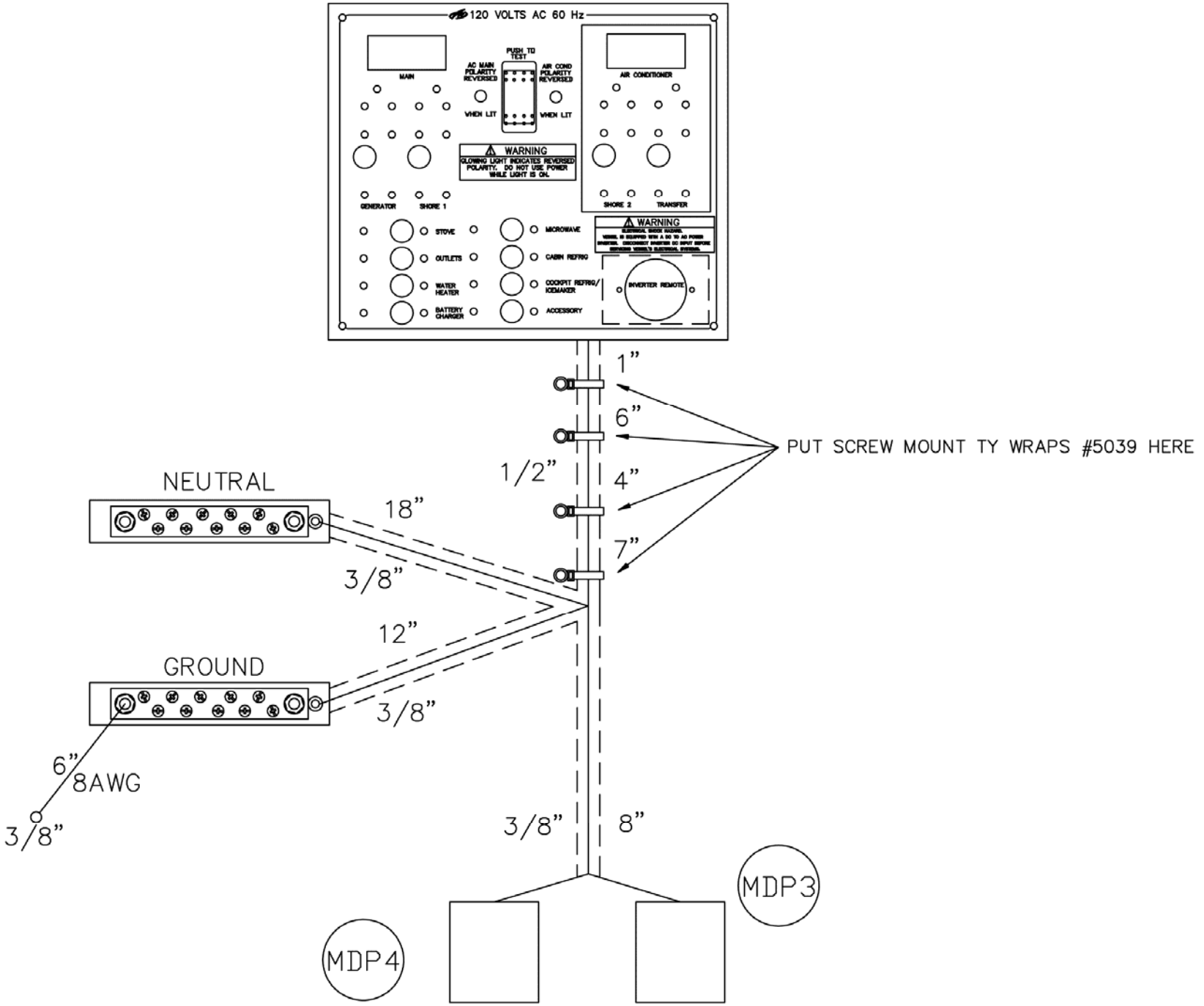

AC Panel 120V Routing

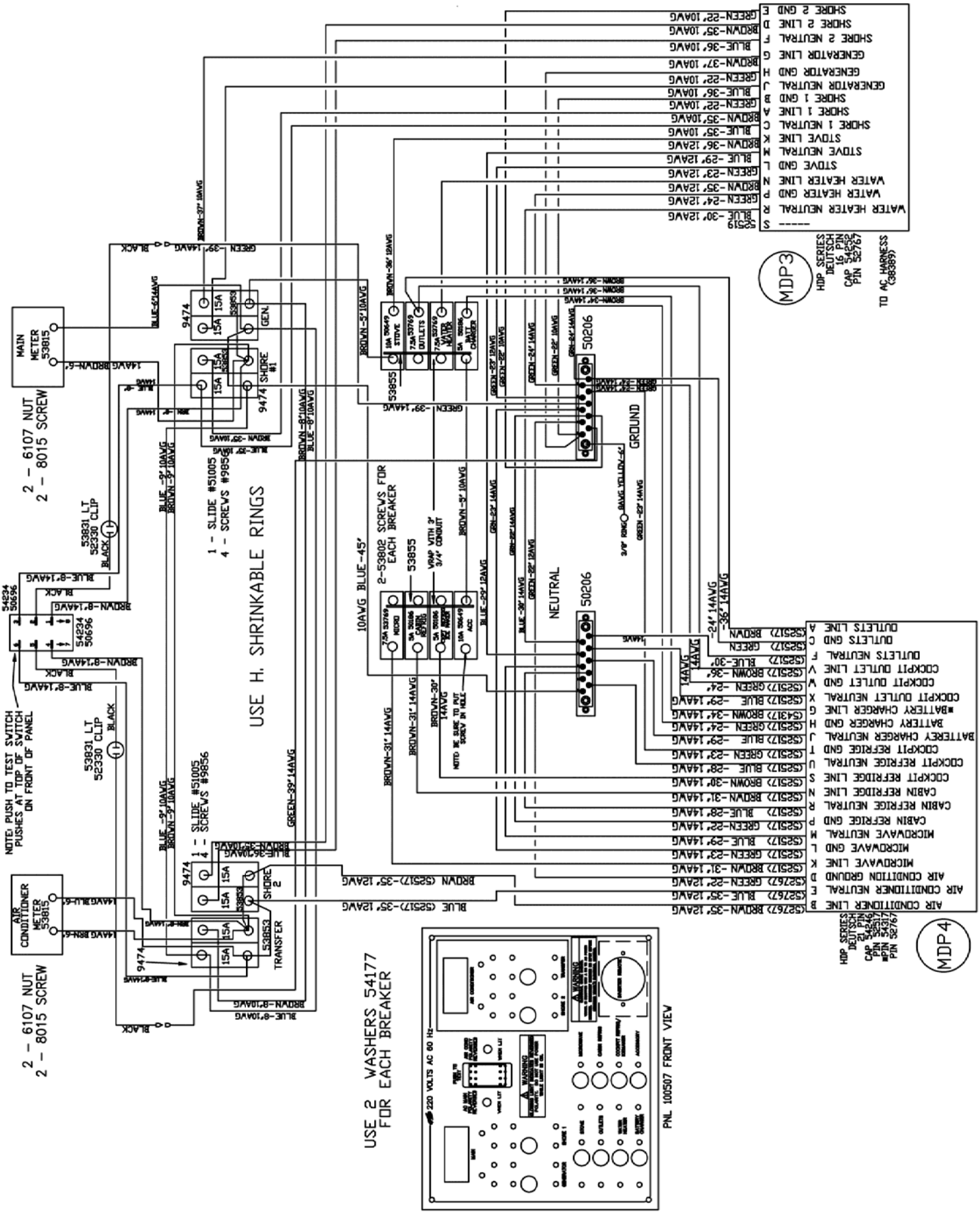

AC Panel 220V

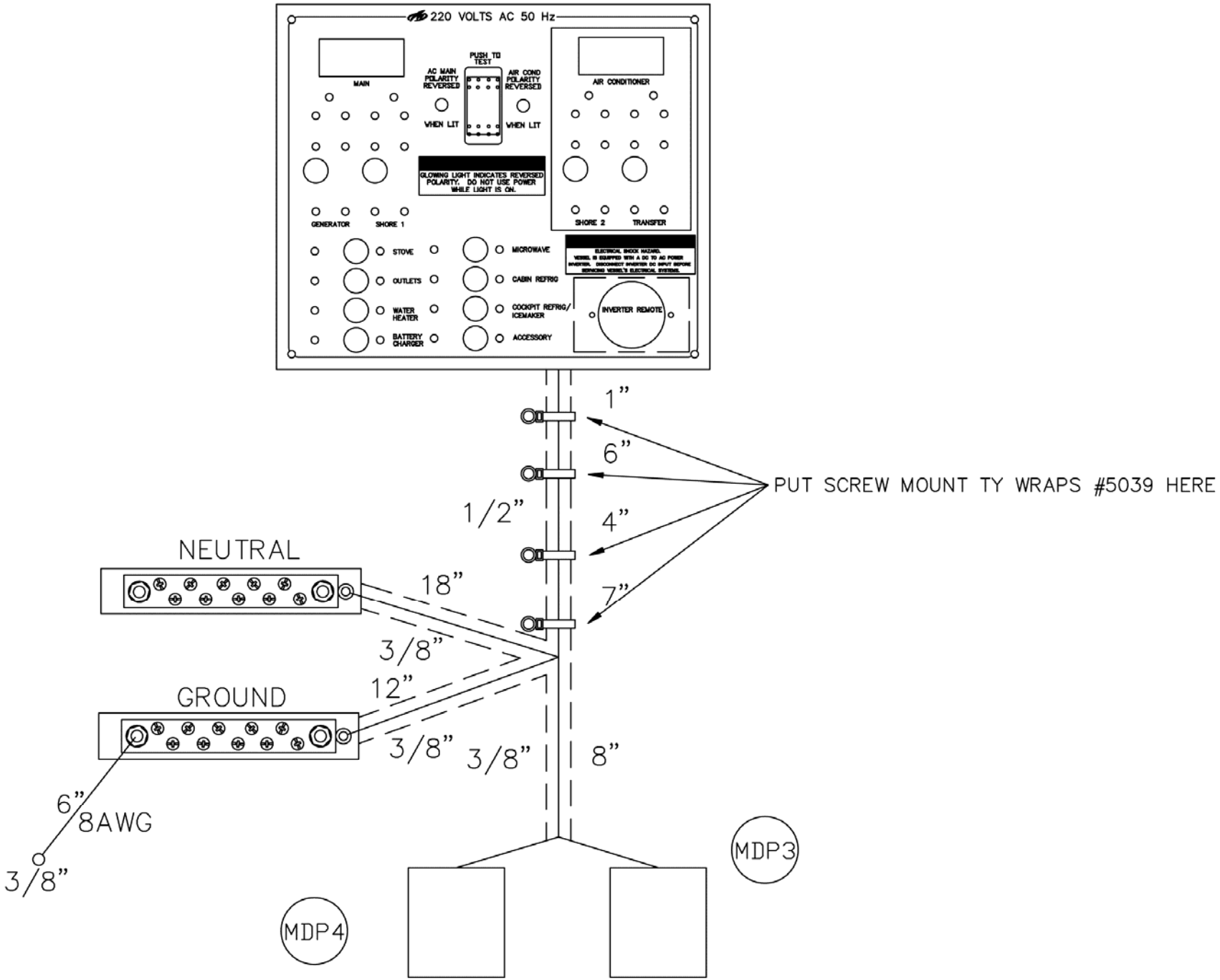

AC Panel 220V Routing

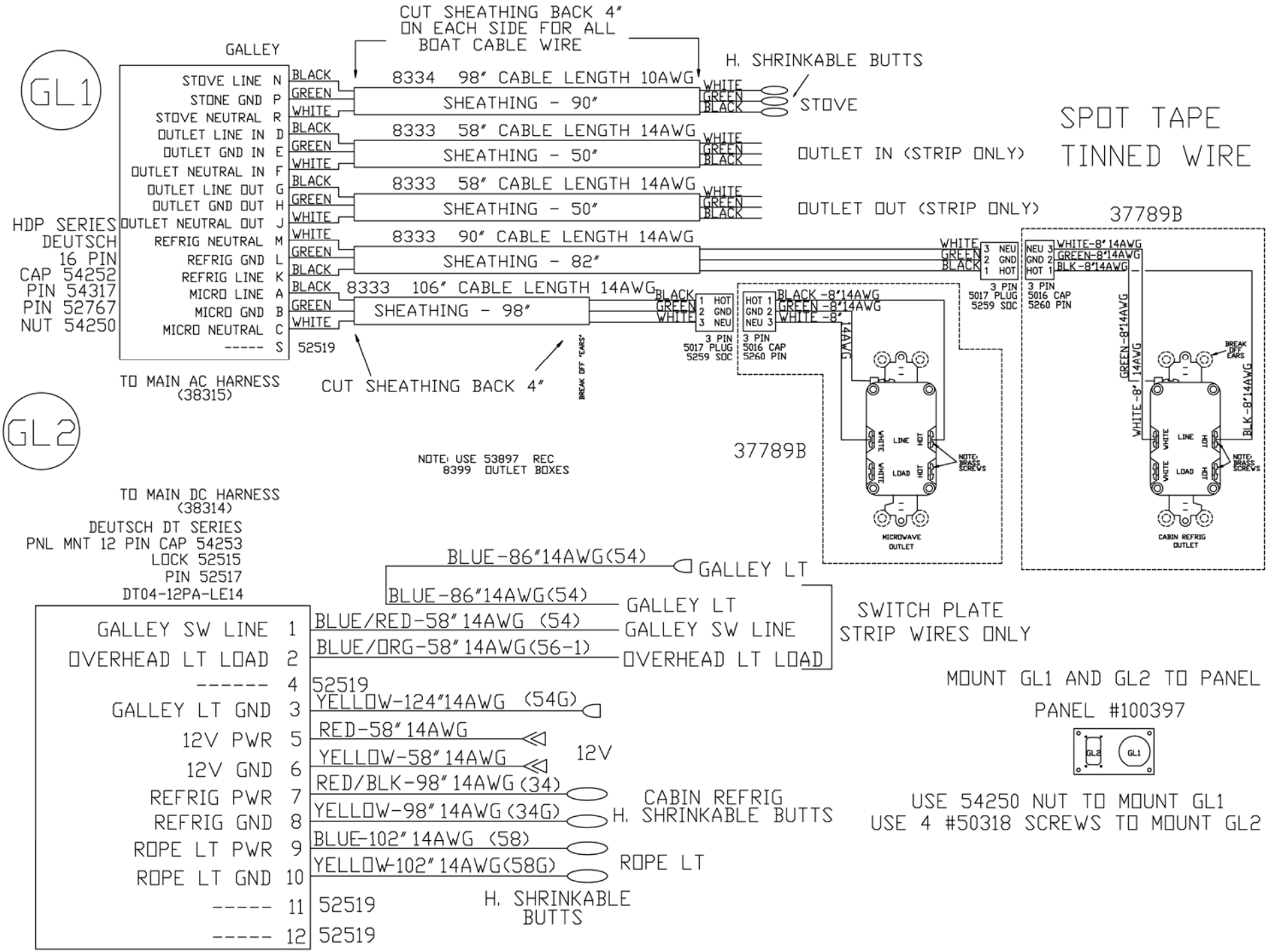

Galley Harness 120V

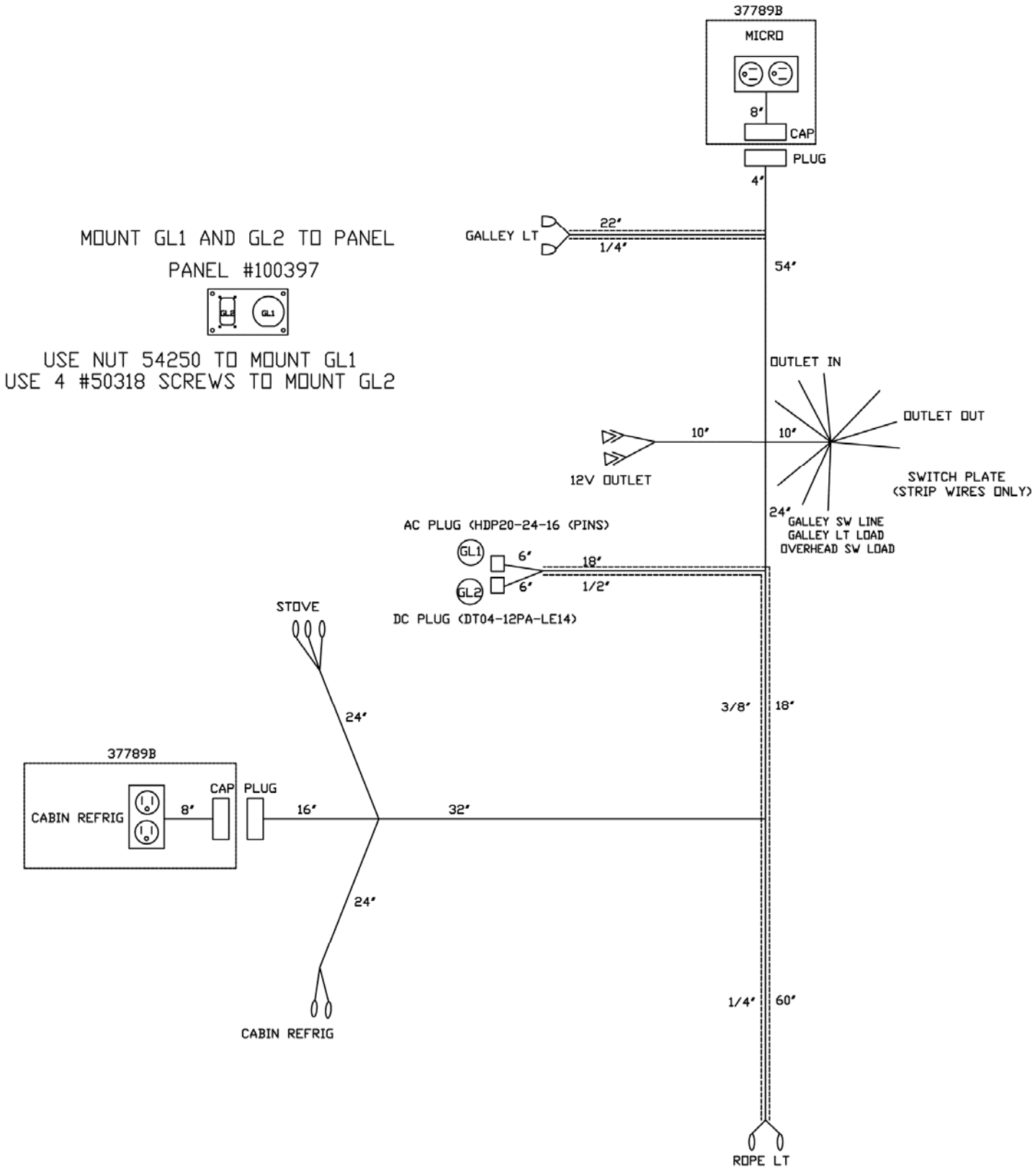

Galley Harness 120V Routing

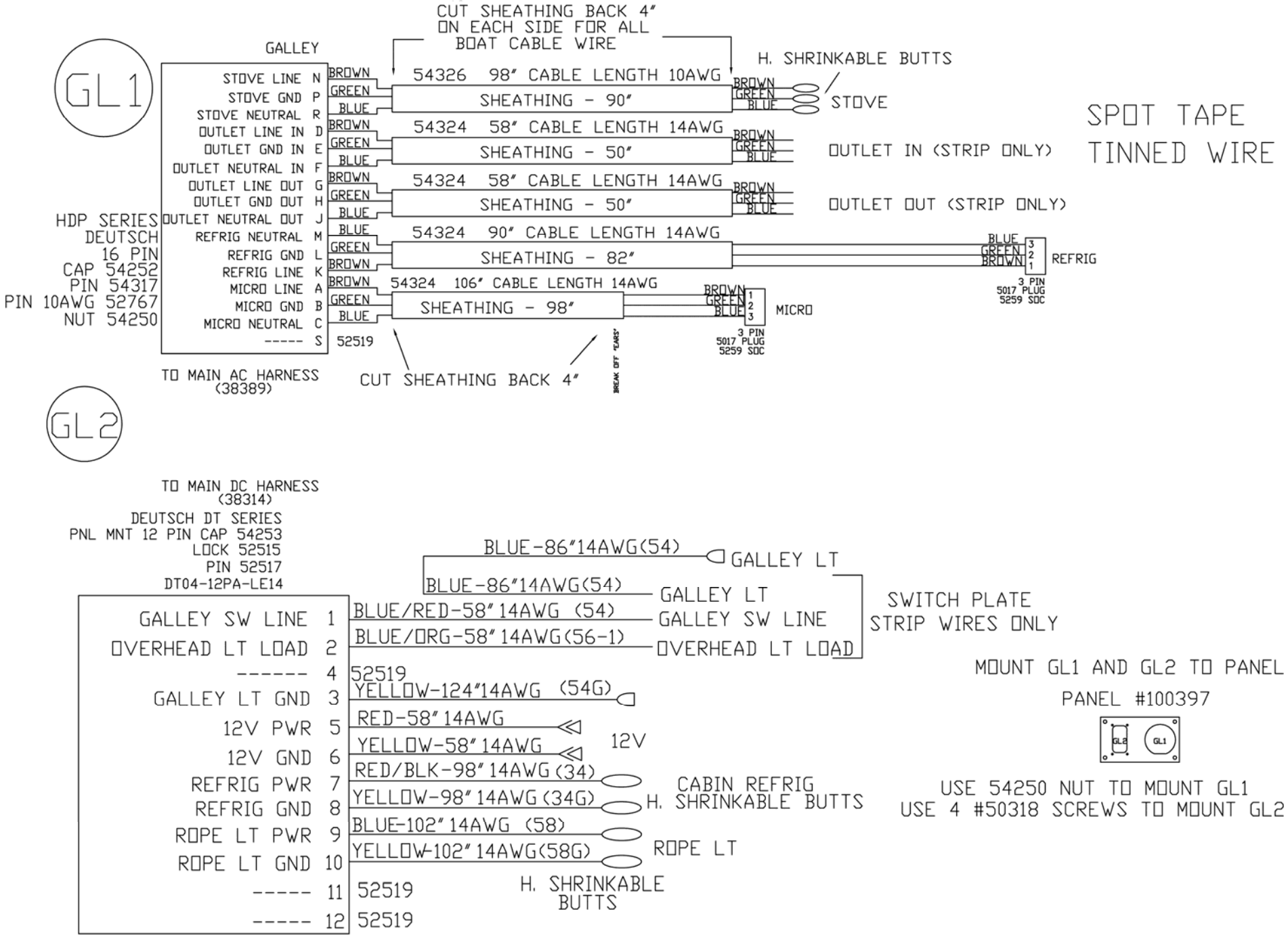

Galley Harness 220V

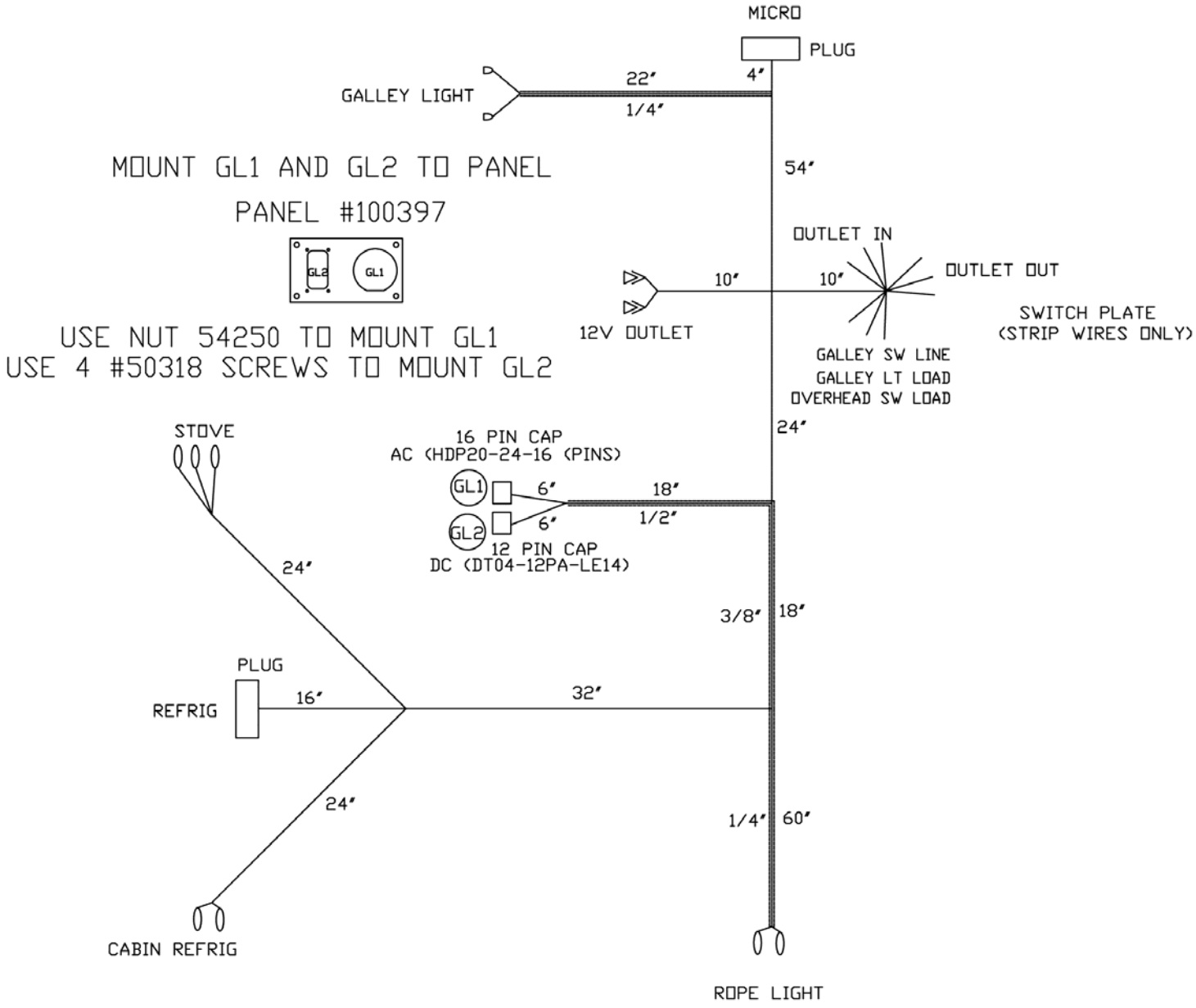

Galley Harness 220V Routing

MONTEREY BOATS
1579 SW 18TH ST
WILLISTON, FL 32696
PHONE - 352-529-9181 FAX - 352-529-9172
WWW.MONTEREYBOATS.COM

P/N - 63104400-00-MANU *REV 2/2009*